TOP TOOLS FOR Smoothing & Shaping

SQUARE IT UP! The Keys to Woodworking Accuracy

Woodsmith®

Woodsmith.com

Vol. 36 / No. 213

Woodsmith 35 YEARS 1979 - 2014

SMOOTH, FLAT PANELS WITHOUT BREAKING A SWEAT

Inside:

7 Tips for Perfect Panel Glueups

The One Tool You Need For Cleaner Assemblies

Q & A: Clean Cuts with Your Router Every Time

Woodsmith

PUBLISHER Donald B. Peschke

EDITOR Bryan Nelson
MANAGING EDITOR Vincent Ancona
SENIOR EDITOR Wyatt Myers
ASSOCIATE EDITOR Dennis Perkins
ASSISTANT EDITOR Robert Kemp
CONTRIBUTING EDITORS Phil Huber, Randall A. Maxey, Dennis Volz

EXECUTIVE ART DIRECTOR Todd Lambirth
SENIOR ILLUSTRATORS Harlan V. Clark, Erich Lage, David Kallemyn
SENIOR GRAPHIC DESIGNER Bob Zimmerman
GRAPHIC DESIGNER Becky Kralicek
GRAPHIC DESIGN INTERN Ryan C. Meier
CONTRIBUTING ILLUSTRATORS Dirk Ver Steeg, Peter J. Larson

CREATIVE DIRECTOR Ted Kralicek
SENIOR PROJECT DESIGNERS Chris Fitch, Jim Downing
PROJECT DESIGNER/BUILDER John Doyle
SHOP CRAFTSMEN Steve Curtis, Steve Johnson
SENIOR PHOTOGRAPHERS Crayola England, Dennis Kennedy
ASSOCIATE STYLE DIRECTOR Rebecca Cunningham
SENIOR ELECTRONIC IMAGE SPECIALIST Allan Ruhnke
PRODUCTION ASSISTANT Minniette Johnson
VIDEO EDITOR/DIRECTOR Mark Hayes
VIDEO PRODUCTION SPECIALIST Patrick McDaniel

Woodsmith® (ISSN 0164-4114) is published bimonthly by August Home Publishing Company, 2200 Grand Ave, Des Moines, IA 50312.

Woodsmith® is a registered trademark of August Home Publishing.
Copyright© 2014 August Home Publishing Company. All rights reserved.

Subscriptions: Single copy: $4.95.
Canadian Subscriptions: Canada Post Agreement No. 40038201. Send change of address information to PO Box 881, Station Main, Markham, ON L3P 8M6. Canada BN 84597 5473 RT
Periodicals Postage Paid at Des Moines, IA, and at additional offices.
Postmaster: Send change of address to *Woodsmith*, Box 37106, Boone, IA 50037-0106.

WoodsmithCustomerService.com

ONLINE SUBSCRIBER SERVICES

- **VIEW** your account information
- **RENEW** your subscription
- **CHECK** on a subscription payment
- **PAY** your bill
- **CHANGE** your mailing or e-mail address
- **VIEW/RENEW** your gift subscriptions
- **TELL US** if you've missed an issue

CUSTOMER SERVICE **Phone: 800-333-5075**

SUBSCRIPTIONS
Customer Service
P.O. Box 842
Des Moines, IA 50304-9961
subscriptions@augusthome.com

EDITORIAL
Woodsmith Magazine
2200 Grand Avenue
Des Moines, IA 50312
woodsmith@woodsmith.com

AUGUST HOME PUBLISHING COMPANY Printed in U.S.A.

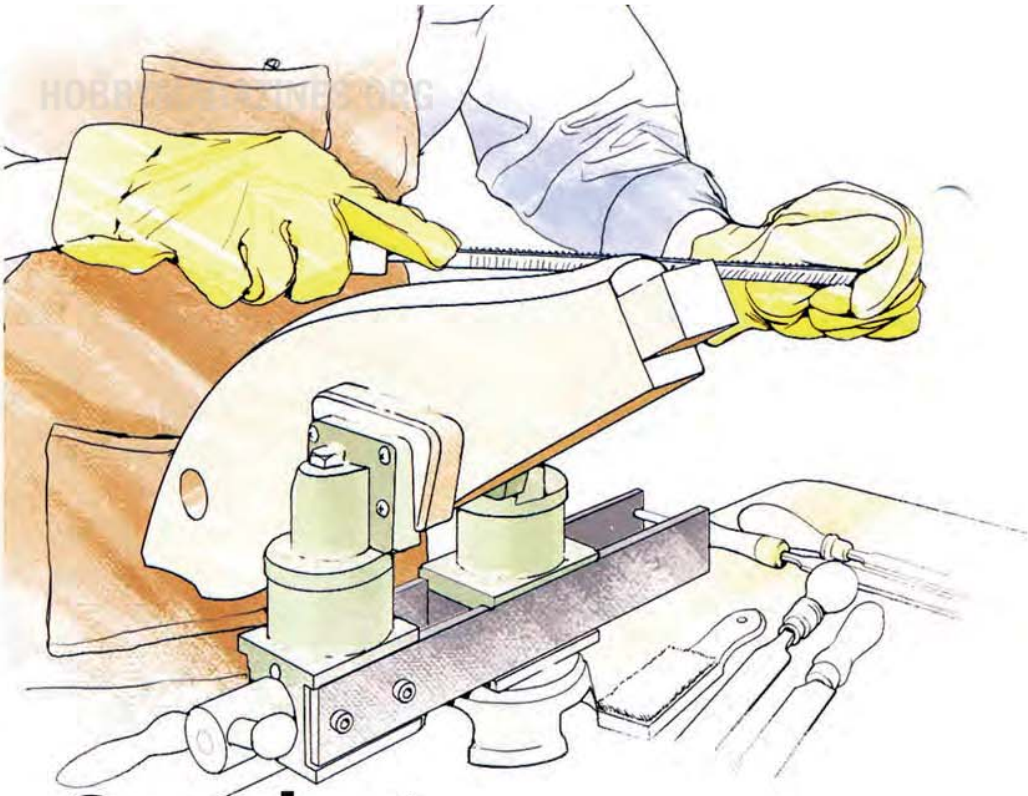

Sawdust

For years Chris Fitch, one of our designers, has been building mechanical marvels that take center stage out in the yard. They're often referred to as whirligigs, because once the wind begins to blow, they come to life. Honestly, seeing how they work is quite fascinating and we thought it was high time to feature one as a project.

Check out the article starting on page 22 and you'll see the whimsical fish he came up with. As the breeze picks up, the mouth opens and closes and the tail moves back and forth like it's swimming through the air (we have a video online so you can see for yourself). Watching the whirligig move is fun and building it is great way to develop your shaping and carving skills.

Looking for a quick and easy weekend project? The towel rack (page 16) is a good choice and a practical project. And finally, the fireplace surround on page 34 takes a different spin. It's a built-in project that allows you to use your woodworking skills to upgrade the look of your home.

Back Issue Libraries. At the end of last year, I let you know about our new online version of the *Woodsmith* back issue library. Well, our sister publication, *ShopNotes*, is now available online, as well. Both of them work the same way. If you already own the back issue DVD of the magazine, access to the online version is free. Or you can buy the online version, and get the associated DVD for free. The end result — a wide range of money-saving tips, skill-building techniques, and great projects right at your fingertips. You can find more information by going online to *woodsmithlibrary.com* or *shopnoteslibrary.com*.

Bryan

HOBBYMAGAZINES.ORG

contents

No. 213 June/July 2014

Departments

from our readers
Tips & Techniques 4

all about
Must-Have Tapes 8

tools of the trade
Smooth, Flat Panels 10

jigs & fixtures
Get More from a Hand Drill 12

techniques from our shop
Square It Up! 14

tips from our shop
Shop Notebook 32

woodworking technique
7 Tips for Perfect Panels 42

working with tools
Countersinks: Clean Assemblies . . 44

hand tool skills
Smoothing with Files & Rasps . . . 46

woodworking essentials
Curves on the Band Saw 48

in the mailbox
Q & A: Clean Cuts 50

Projects

weekend project
Towel Rack 16

With this weekend project, you can provide a more attractive spot to hang your towels than a doorknob or shower door. And it features some essential woodworking skills, as well.

outdoor project
Folk Art Whirligig 22

All it takes is a gentle breeze to set this mechanical marvel in motion. It's sure to catch everyone's eye, and it's a great opportunity to try a little free-form shaping using hand tools.

heirloom project
Frame & Panel Fireplace Surround 34

Upgrade your fireplace by adding a custom-built surround. Basic construction makes it simple to build and you'll find easy-to-follow instructions for customizing it to suit your fireplace.

from our readers

Tips & Techniques

HOBBYMAGAZINES.ORG

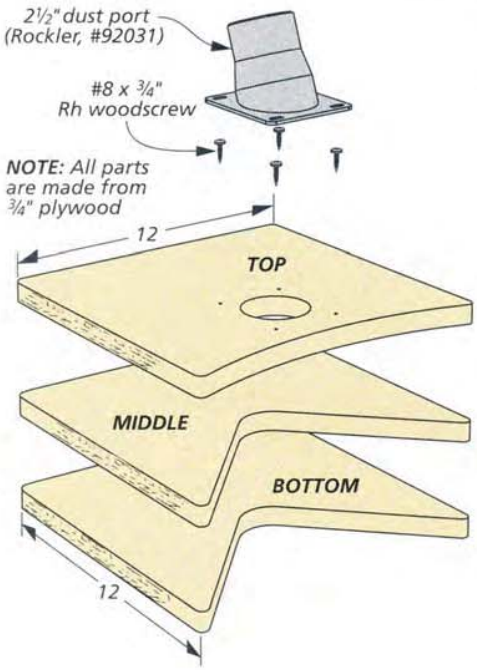

Router Table Dust Hood

When using my router table, a hose from my dust collection system attached to my router table fence has always done a great job keeping the dust at bay in my shop. However, when my fence is removed for free-hand routing, I didn't have an adequate way to capture all of the dust and chips. To solve that problem, I built the router table dust hood you see above.

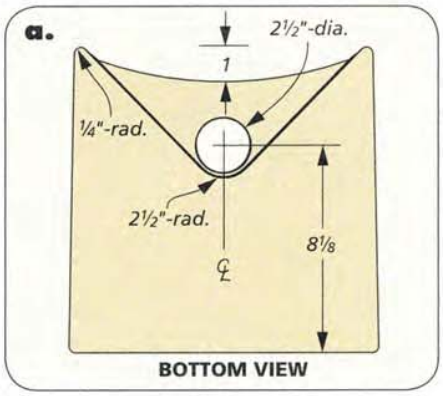

BUILD IT. The hood is pretty simple. It consists of three layers of plywood. The lower two layers are glued together and then cut to shape. Cut the top to size in the same manner, noting that there is just a slight curve on the front edge of this piece. A hole drilled on the top accommodates the dust port. Now it's just a matter of gluing the top to the lower layers and rounding all the corners with a disc sander.

USING THE HOOD. To use the dust hood, simply clamp it to the back edge of the router table. Position it so you have adequate clearance for your workpiece. The V-notch in the two lower layers directs the dust and chips towards the dust port.

David Howerton
Post Falls, Idaho

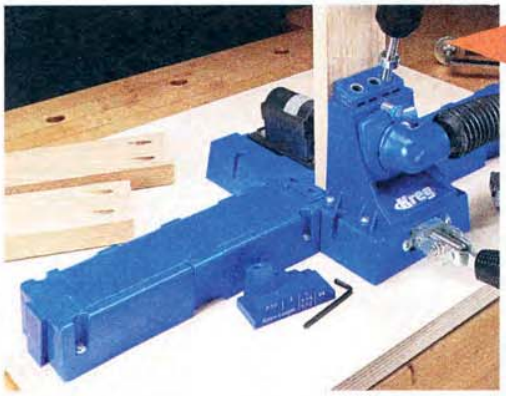

Win This Kreg K5 Jig

Simply send us your favorite shop tips. If your tip or technique is selected as the featured reader's tip, you'll win a *Kreg K5 Jig* just like the one shown here. To submit your tip or technique, just go online to *Woodsmith.com* and click on the link, "SUBMIT A TIP." There you can submit your tip and upload your photos for consideration.

The Winner!

Congratulations to Dan Martin, the winner of this *Kreg K5 Jig.* To find out how you can win this jig, check out the information at left.

HOBBYMAGAZINES.ORG

End-Drilling Router Jig

For a project I was building, I had to drill a centered hole in the end of several ½" dowels. To keep all of the holes consistently centered, I made this simple jig for my plunge router.

MAKE THE JIG. The body of the jig is just four pieces of plywood glued together with a base made a little larger to act as a clamping surface. The holes in the center of the jig are sized to accommodate the dowel and a router bushing, as shown at right.

USE THE JIG. Start by clamping the dowel in a vise. Place the jig over the end of the dowel until it stops. With a bushing attached to the router, plunge a spiral bit into the end of the dowel to drill a centered hole.

Bill Huber
Haslet, Texas

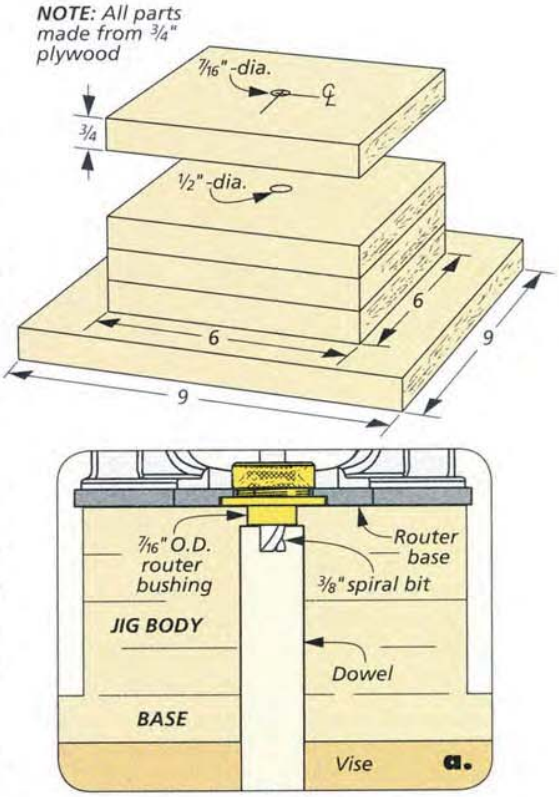

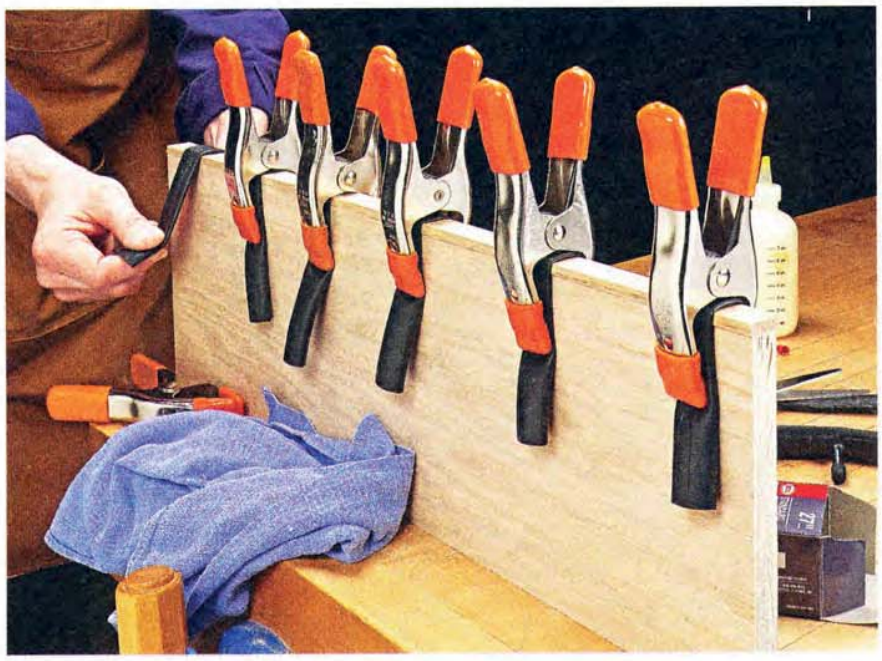

Easy Edge Banding Clamp

Recently, while applying hardwood edging to some plywood shelves for a bookcase, I ran short of the necessary clamps to finish all of the glueups. With only spring clamps left in my arsenal, I came up with this clever way to use rubber strips cut from a bicycle inner tube to clamp the edging in place.

STRIPS OF TUBING. I started by cutting the inner tube into strips long enough to wrap around the top edge of the panel. These should also be long enough so the rubber extends below the tips of the jaws on the spring clamps.

CLAMP UP. Place the glued-up hardwood edging on the plywood panel and hold a piece of tubing in place with a spring clamp. To increase tension, simply pull down on the tubing sticking out below the clamp jaws.

James Mattea
Milwaukee, Wisconsin

DIGITAL WOODSMITH

SUBMIT TIPS ONLINE

If you have an original shop tip, we would like to hear from you and consider publishing your tip in one or more of our publications. Jump online and go to:

Woodsmith.com
Click on the link,
"SUBMIT A TIP"

You'll be able to tell us all about your tip and upload your photos and drawings. You can also mail your tips to "Woodsmith Tips" at the editorial address shown on page 2. We will pay up to $200 if we publish your tip.

RECEIVE FREE ETIPS by EMAIL

Now you can have the best, time-saving secrets, solutions, and techniques sent directly to your email inbox. Just go to

Woodsmith.com
and click on
"WOODSMITH TIPS"

You'll receive one of our favorite tips each and every week.

Table Saw Infeed Table

I like to use my table saw to break down large sheets of plywood into more managable pieces. My saw has plenty of outfeed support, however, large, thin sheets of plywood have a tendency to sag from their own weight as they are being fed into the blade. This makes the operation a challenge.

To make this operation safer, I designed this infeed table. The table is easy to attach to my saw's fence rail when I need to cut a sheet of plywood. When I'm done, it folds up and stores out of the way (photo below). Its narrow profile allows me to walk alongside as I feed material through the blade.

MAKE THE TABLE. As shown below, the infeed table is constructed from plywood with a continuous hinge connecting it to the leg. The edge of the table is notched to fit around the rip fence and a long piece of aluminum angle is fastened to the tabletop to align with the fence.

A couple short pieces of aluminum angle screwed to the underside of the table slip over the front rail of the saw. Two toggle clamps lock the table in place (detail 'a' below).

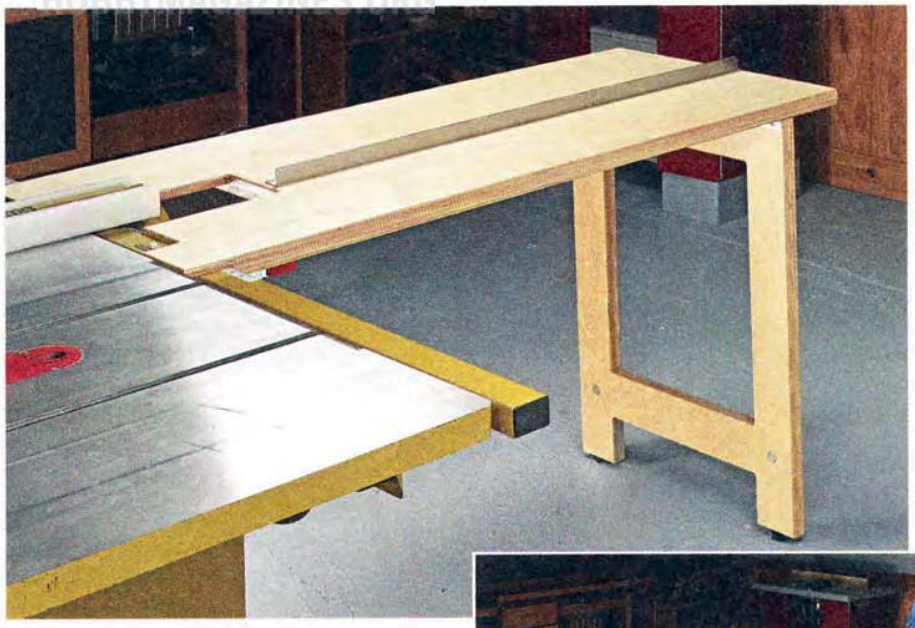

ADD THE LEG. The leg is constructed from two layers of plywood glued together. To remove excess weight, I cut an opening in the center. A couple of T-nuts in the bottom of the leg assembly hold a pair of leg levelers. Two rare-earth magnets keep the assembly folded when stored.

Dan Martin
Galena, Ohio

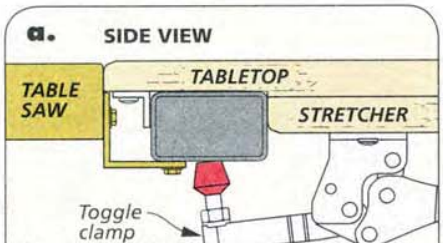

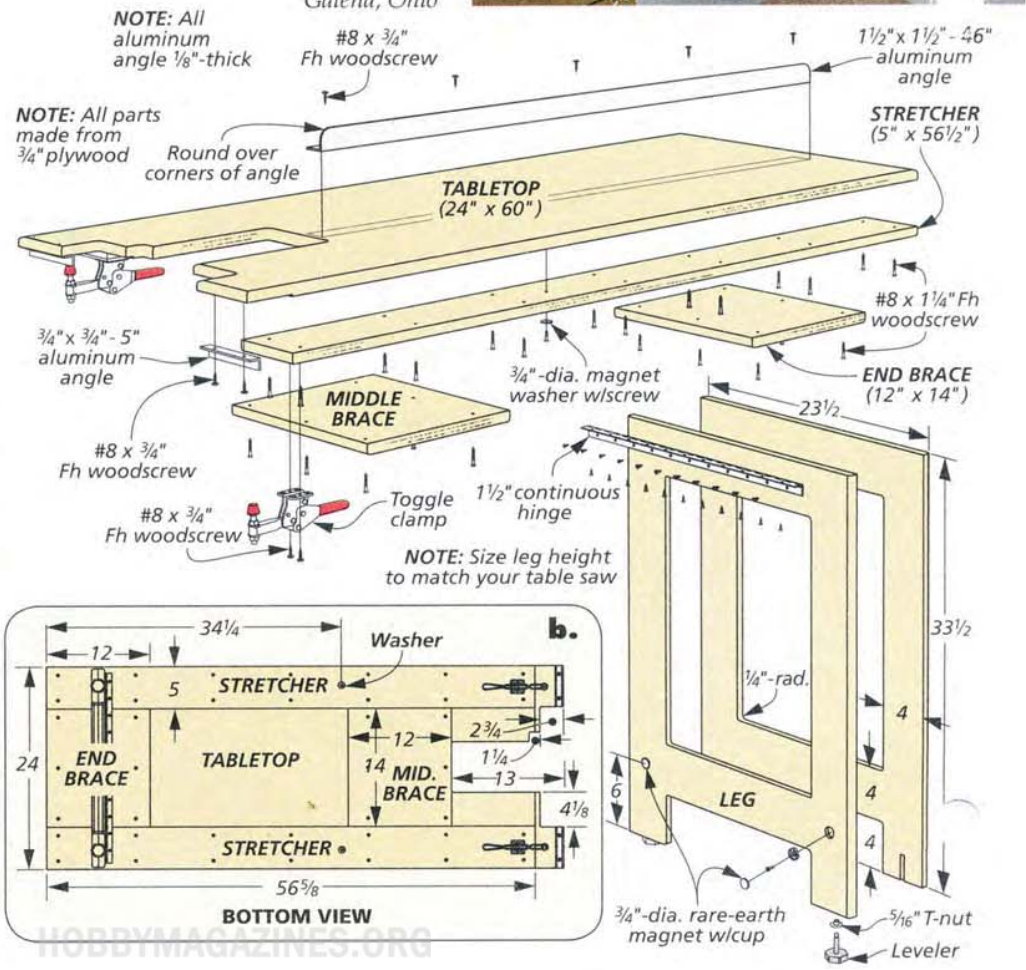

HOBBYMAGAZINES.ORG

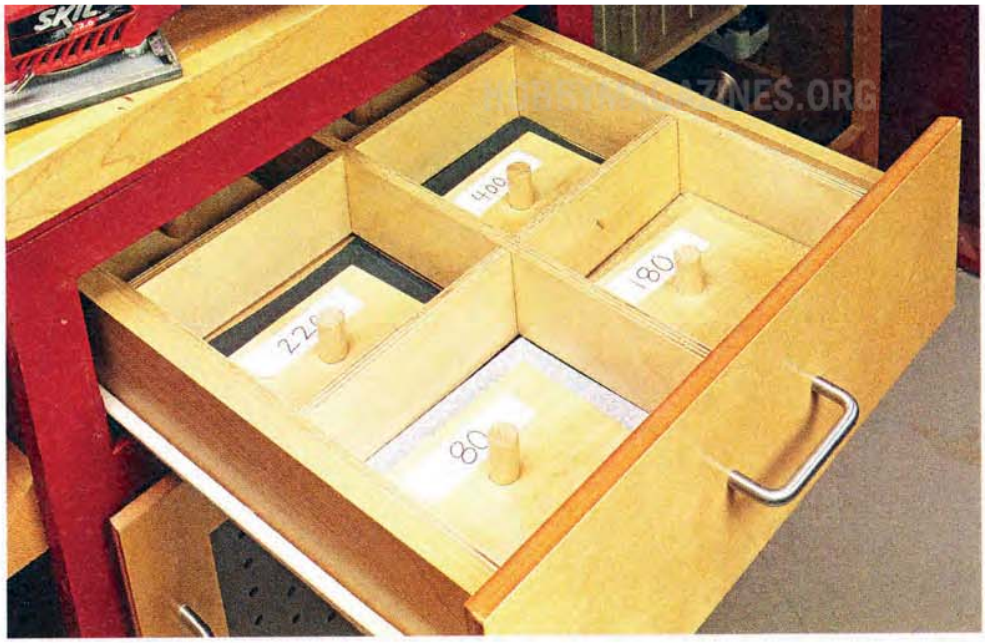

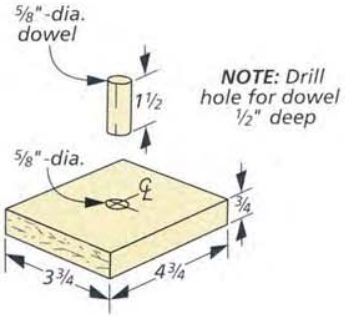

Sandpaper Storage

I use a quarter-sheet finishing sander quite frequently in my shop. To make changing paper as quick as possible, I like to keep sandpaper cut to size and ready to use at all times. But storing and organizing these small sheets can be a hassle, not to mention that they have a tendency to curl. To solve both of these problems, I made this storage grid for one of my shop drawers.

STORAGE GRIDS. My storage system consists of narrow pieces of plywood, joined with notches to create the grid. These notches are easy to cut using a dado blade in the table saw. The nice thing about this storage system is that it can be customized to fit the inside of any available drawer space.

KEEP THEM FLAT. In order to keep the small sheets of sandpaper from curling in the drawer, I added blocks of plywood with a dowel handle to each bay. A label on each block makes it easy to select the grit I need.

Barry Roberts
Lowden, Iowa

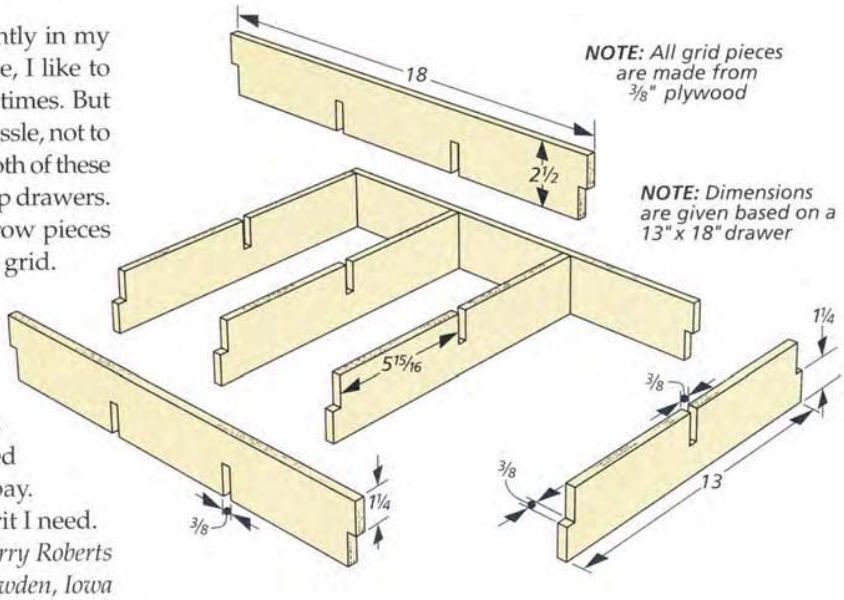

QUICK TIPS

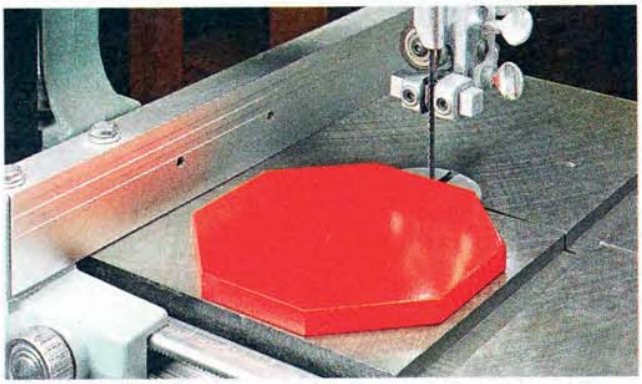

Tension Lever Warning Sign. *Steve French* of Lakeland, Florida likes to release the tension from his band saw blade when not in use for long periods. In order to remember to tension the blade, he places a stop sign-shaped piece of plywood on the saw table as a reminder.

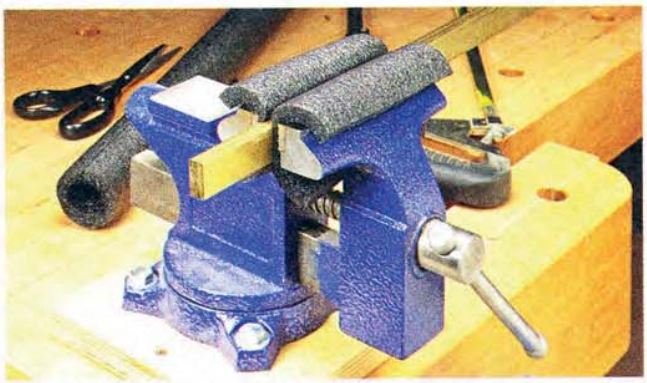

Soft Machinist's Vise Pads. To keep from marring the surfaces of delicate materials, *Serge Duclos* of Delson, Quebec covers the faces of his vise jaws with sections of pipe insulation. The pieces are pre-slit and slip right over the jaws for quick installation.

HOBBYMAGAZINES.ORG

all about

5 favorite Tapes for the Shop

You may not think of a roll of tape as a woodworking "tool," but sometimes there's just no substitute. Whether you're looking to bond something permanently or just hold a couple of parts together temporarily, odds are there's a tape out there that's perfectly suited for that application. Here are some of the tapes I like to keep on hand in my shop.

▲ Most of these tapes are available in varying widths to customize to your needs. UHMW slick tape is available in sheets or rolls.

DOUBLE-SIDED TAPE. While "carpet tape" has long been a mainstay in many woodworking shops, I have recently become a fan of the double-sided woodworking tape made by *Avery Dennison*. This tape, shown in use above, has several advantages over standard carpet tapes. Because the two sides of the *Avery Dennison* tape each use a different adhesive, it excels at attaching a template to a workpiece. One side has a "permanent" adhesive that is fixed to the template first. Then the other less tacky side can be attached to the workpiece. Once in position, the tape allows no lateral movement, but can be repositioned on the workpiece easily.

Another advantage of this tape is that it tears conveniently by hand, eliminating the need to track down scissors or a utility knife. Also, it leaves no residue when removed, something that can't be said for regular carpet tape.

PAINTER'S TAPE. Masking tape has all but been replaced by the newer painter's tapes available today. Because masking tape is notorious for being difficult to remove and for leaving gummy residue on worksurfaces, painter's tapes are hands down the perfect alternative.

Besides being useful for masking off areas when finishing parts, painter's tape also helps to keep glue squeeze-out off of finished areas when doing assembly work. It can even double as a "clamp" when joining small parts.

HOBBYMAGAZINES.ORG

To prevent tearing out fibers when cutting cabinet-grade plywood, I prefer to use a low-tack painter's tape like the *FrogTape* shown at right. This particular tape is labeled as "delicate surface." It provides a low adhesion to your workpiece and removes cleanly. Simply place the tape, mark your cut line, and make the cut.

SPEEDTAPE. When I don't want to deal with the hassle of contact cement or a messy spray adhesive, I grab my roll of *SpeedTape* by *FastCap* (shown below). This double-sided acrylic tape is incredibly sticky stuff that provides instant adhesion. It sets up to maximum strength within 24 hours.

Designed to adhere laminates, veneers, or edge banding to a worksurface, this tape is also strong enough to be used for cabinet refacing. To use, simply apply the tape to one surface, peel off the paper liner and press the material to the tape. A J-roller should be used to apply even pressure over the entire surface.

▲ A low-tack painter's tape works great for preventing tearout on plywood surfaces. Apply the tape, press it down firmly, then mark the cut line. Remove the tape by pulling it at a slight angle as shown above. This will keep the wood fibers from tearing out.

▲ Acrylic *SpeedTape* is the perfect alternative to contact cement. It provides a permanent bond between edge banding and a workpiece.

UHMW SLICK TAPE. Ultra-high-molecular-weight (UHMW) polyethylene tape is another great product to keep in the shop. This "slick tape" is perfect for making parts slide more easily. UHMW tape is perfect for use with jigs, fixtures, or on the face of a table saw rip fence. It also works wonders on wood drawer runners. It not only makes the drawers function effortlessly, it also helps prevent wear on the runners.

I like to use UHMW tape on my pipe clamps, as shown at right. It allows me to easily position heavy workpieces for glueup. It also makes glue cleanup a snap. Any glue that squeezes out onto the clamp can simply be "chipped" off with the light touch of a scraper. In addition, the tape keeps unsightly black stains off my workpieces.

▲ Wrapping a strip of UHMW slick tape on a pipe clamp helps to keep black stains off your workpiece.

HIGH-FRICTION GUARD TAPE. This final tape is not really a "tape" in the true sense of the word. There is no obvious adhesive, and it will only stick to itself, not other things. Comprised of a cotton gauze coated with a latex compound, high-friction guard tape is perfect for protecting your fingers when doing carving work, as shown at far left. Plus, it holds its shape well, allowing it to slip on and off your fingers easily.

Guard tape is also useful for improving the grip on hand tools. The high-friction nature of this tape makes it an ideal wrap, as shown near left.

For many people, purchasing any tape product is often an afterthought when they're on the way out of the big box store, and less a primary concern. But a little planning before your shopping trip can ensure that you have the right kind of tape on hand to meet several workshop needs.

▲ High-friction guard tape can help prevent cuts and abrasions when using sharp cutting edges close to your fingers.

▲ Wrapping hand tools with guard tape provides a better grip. This is especially useful when working in warm weather.

HOBBYMAGAZINES.ORG

smooth, flat panels with Drum Sanders

Walk into just about any commercial cabinet shop and chances are you'll find a drum sander. These stationary tools come in handy for tasks like flattening glued-up panels or smoothing shop-made veneer.

In the last 20 years or so, however, the perception of drum sanders has changed. A number of smaller, less expensive models are now available for the home woodworker. While the tool is not essential for completing a project, it can play an important role in virtually every project you build. Whether you need to smooth figured wood, flatten panels, or make pieces a consistent thickness, this sander can handle it.

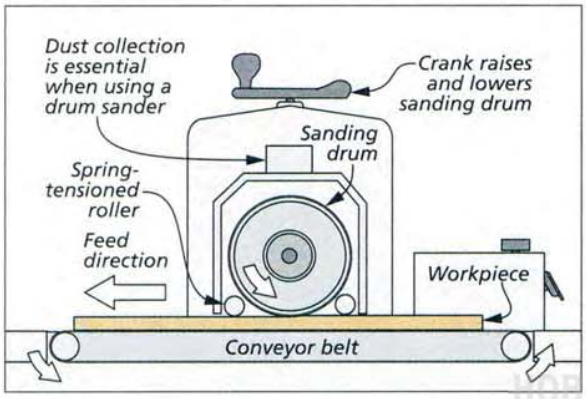

SANDER OVERVIEW. The most important component of this type of sander is the cylindrical sanding drum, which gets wrapped with a sanding belt. It's flanked on both sides by spring-tensioned rollers that keep the workpiece flat. There's a large crank that adjusts the height of the drum, and a conveyor belt that carries the workpiece through the sander (drawing at left).

At first glance, people tend to compare drum sanders to thickness planers. In practice, however, the tools are quite a bit different. A thickness planer is meant to remove large amounts of stock from a board. While a drum sander can do this to a degree, it's intended to be more of a finishing tool that leaves a flat, smooth surface that only requires a minimal amount of hand sanding afterward.

SANDERS FOR THE SHOP. For the home shop, you can find drum sanders for as little as $575. However, these usually have fairly short drums (12" or less). So if you plan on sanding large glued-up panels, you'll want a drum sander with greater capacity.

Another thing to consider is the design of the sander. Some sanders are enclosed on both ends, so there's no possibility of passing a wider board through them. But other drum sanders, like the

one shown here, have an open end. This essentially doubles the capacity of the sander, as you can pass one half of a panel through the sander, then flip it around to sand the other half. Open-ended sanders often have names that reflect this capacity (10-20, 16-32, etc.)

CHOOSING A SANDER. The smaller sanders with 12" or shorter drums are less expensive, but obviously limited in terms of capacity. If you're serious about adding a high-value sander to your shop, I suggest spending a little more on a sander with both an open end and a drum that's at least 16" long. It can handle about any panel you can throw at it (see Sources on page 51).

SANDER SETUP. Setting up a drum sander in your shop isn't all that difficult. Keep in mind for the sander shown here that you'll need a 20-amp, 110-volt circuit in your shop. And dust collection is absolutely essential with this tool.

Before using the sander, you'll wrap the drum with a cloth sanding belt that clips in at both ends (photos, right). This takes a little practice to get it right. It's critical to wrap it tightly, and butt the edges of the belt against one another without overlapping.

SANDER USE. As mentioned earlier, it's not a good idea to treat a drum sander like a thickness planer. In fact, that's a good way to burn up a sanding belt. I like to use it to make a very light pass to flatten and smooth my work.

To do this, lower the drum until the spring-tensioned rollers on either side of the drum just contact the piece. Then start the conveyor belt, feed in the workpiece, and continue lowering the drum until it contacts the wood. Now feed the piece through again at the same setting to even it out. Once I have the drum set, I run the conveyor belt at a high speed for most of my work to avoid burning.

As I continue to sand, I'll make very light passes, only giving the crank a partial turn between each pass. Also, I'll clean the spinning drum with a rubber block frequently. This increases the longevity of the sanding belt.

Once you get the hang of using the sander, you'll find it excels at a lot of handy tasks. For example, it's great for sanding figured woods like curly or bird's-eye maple. And if you make your own shop-made veneer, the sander can sand pieces as thin as 1/32".

DO YOU NEED A DRUM SANDER? Most woodworkers think of drum sanders for sanding glued-up panels. But the reality is, it's a great way to ensure that all your workpieces start flat and smooth before moving on to hand sanding. So while I wouldn't call a drum sander a "must-have" tool, it can certainly be a valuable addition to your shop. It adds a level of precision to workpiece preparation that's sure to come out in the finished product. W

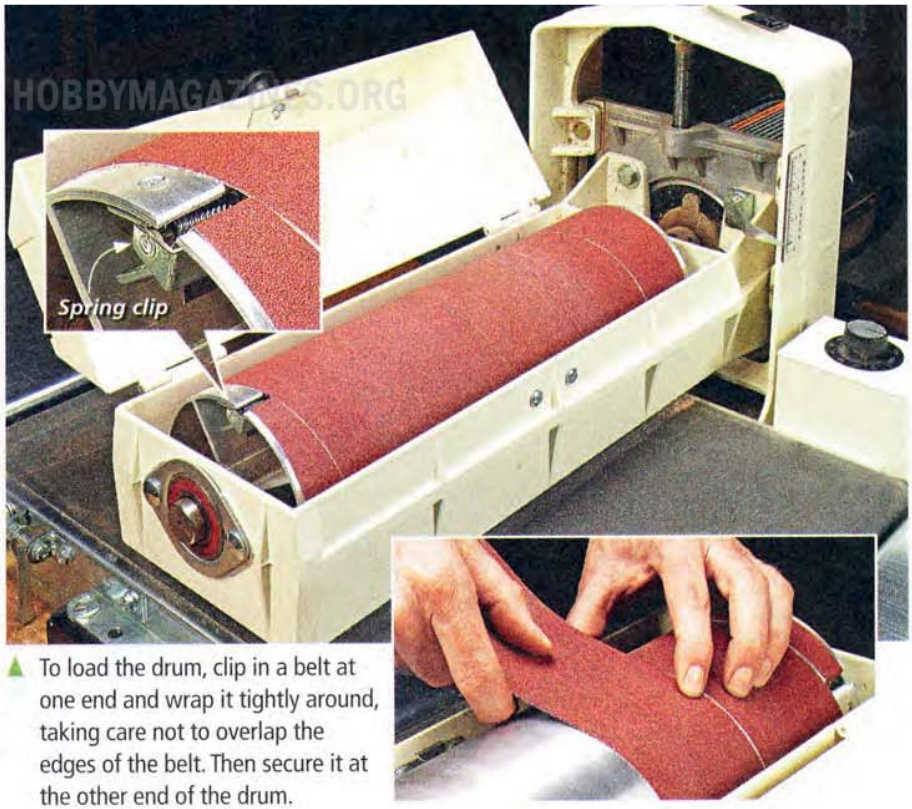

▲ To load the drum, clip in a belt at one end and wrap it tightly around, taking care not to overlap the edges of the belt. Then secure it at the other end of the drum.

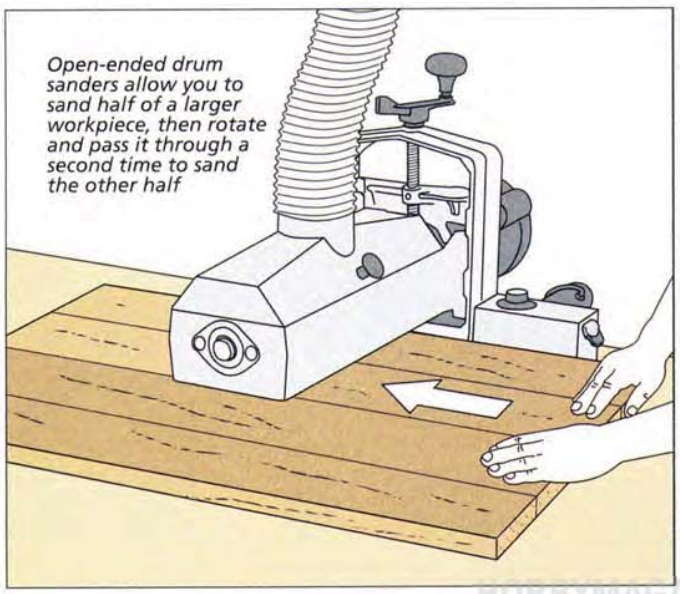

Open-ended drum sanders allow you to sand half of a larger workpiece, then rotate and pass it through a second time to sand the other half

▲ The sanding drum leaves a smooth surface on highly figured woods like bird's-eye maple (upper photo). And the drum can be set quite low to sand thin shop-made veneer (lower photo).

HOBBYMAGAZINES.ORG

hardworking

Hand Drill Accessories

I consider my cordless drill to be an important part of my woodworking tool lineup, especially for driving screws. Still, there are times when I wish it could do a little bit more. For example, sometimes a case side that needs shelf pin holes is just too large to fit onto the drill press table. Or I'd like to drive a screw in a tight space where the drill just won't fit.

▲ The drill guide features a sturdy, wide base, posts that can be set to different angles, and an adjustable depth stop.

Luckily, it's possible to get more accuracy, precision, and reach out of a cordless drill by outfitting it with some inexpensive accessories. I took a look at a handful of them to see how they could help with my woodworking.

DRILL GUIDE. Out of the box, a cordless drill lacks the features that make it a precision tool. For example, it's difficult to drill holes that are 90° to the surface of a workpiece, like you can on a drill press. And drilling stopped holes is hardly an accurate task, either.

That's where the drill guide shown above comes into play. This guide is a *Craftsman* brand sold by *Sears*, but other manufacturers make similar models.

The way the guide works is simple. It has a built-in chuck that gets secured in your drill's existing chuck. This chuck is mounted on a bracket that slides up and down on a pair of posts. It also has a large, stable base that rests against the workpiece.

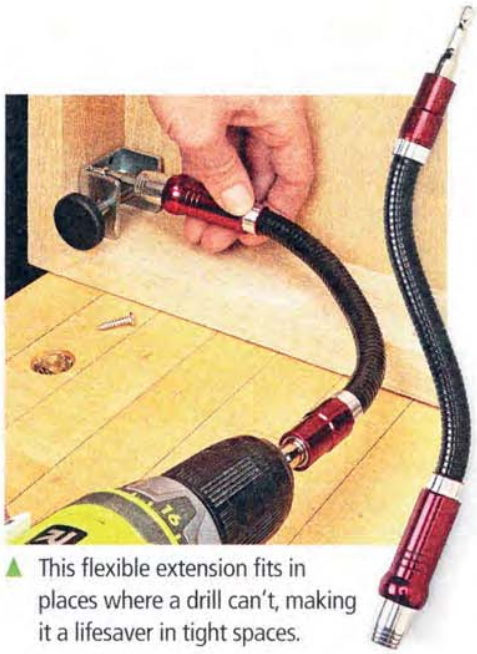

▲ This flexible extension fits in places where a drill can't, making it a lifesaver in tight spaces.

In use, the chuck travels in a perfectly straight line as the bracket slides up and down on the posts. This ensures a hole that's drilled at exactly 90° to your work (main photo above).

HOBBYMAGAZINES.ORG

Plus, the posts can be pivoted back and forth and locked in place, allowing you to drill precise holes at angles other than 90° (see the lower left photo on the opposite page).

If you look closely at that same photo, you'll see a small collar around one of the posts. This is another key feature: A depth stop that allows you to drill holes to a set depth. Altogether, these components make the guide quite useful for precision work, such as drilling stopped shelf pin holes in a tall case side.

FLEXIBLE EXTENSION. Another area where a standard cordless drill comes up short is when you have to drill holes or drive screws in tight places. I build a lot of cabinets, so I'm running across this situation pretty frequently.

The flexible extension bit holder (lower right photos, opposite page) is a good solution here. It simply chucks into the drill and has a quick-change chuck on the other end that accepts ¼" hex shanks. It also has a collar beneath the chuck that provides you with a comfortable grip of the extension.

The result is a versatile accessory that fits into virtually any tight spot and is also comfortable to use. This makes it invaluable for casework where the fasteners butt right up against a worksurface.

Speed up the process of switching between drill and driver bits with a quick-change chuck.

A right-angle attachment is a must-have accessory if you do a lot of work inside cabinets.

RIGHT-ANGLE ATTACHMENT. I tend to reserve the flexible extension for especially hard-to-reach places or odd angles. But the right-angle attachment shown at left sees the bulk of the work in my shop. This particular model has a traditional chuck, so you can use any drill bit with the attachment, not just ones with a ¼" hex shank. It has a handle for stability while drilling or driving, but the handle can be removed when working in very tight spots.

QUICK-CHANGE CHUCK. Even if these situations seldom come up in your woodworking, there's one accessory that you'll probably find valuable almost every time you reach for your drill. And that's a quick-change chuck. These are becoming quite common, and you can find them at most home centers and hardware stores.

I'm constantly switching between drilling pilot holes and countersinks and driving screws when using my cordless drill, and this chuck really speeds up that process. It chucks right into any drill and has a sleeve that slides down to release the drill or driver bit. Just pop the next bit you need in place, and you're ready to go.

Like the flexible extension discussed earlier, quick-change chucks only accept bits with a ¼" hex shank. But most driver bits, a large variety of drill bits, and even many countersinks now come with these shanks. It's worth outfitting your shop with a collection of these bits if you decide to start working with the quick-change chuck.

CHOOSING THE RIGHT ACCESSORY. I've found that each one of these hand drill accessories comes in handy for different tasks around the shop. And they range in price from $5 to $30, which is certainly a lot less expensive than buying another drill. The quick-change chuck essentially has a permanent home in my drill. And the other accessories are real lifesavers when I'm working inside a cabinet, which is quite a bit of the time in my shop.

To find complete source information for all of the accessories shown here, refer to page 51. Also be sure to check out the box on the left for an interesting "twist" on the average right-angle hand drill attachment.

MULTI-ANGLE ATTACHMENT

The *Milescraft Orbiter* takes the basic idea of a right-angle drill attachment a step further by letting you set the chuck to drill or drive at virtually any angle. That's because the chuck and the shank are both mounted to half-spheres that rotate independently of one another. Once you get the *Orbiter* set at the desired angle for the work you plan to do, you just give the soft-grip handle a twist to lock the two spheres in place. Then you can drill a hole or drive in a fastener with ease.

The *Orbiter* allows you to rotate both the chuck and the shank, so you can set it at almost any angle for drilling.

HOBBYMAGAZINES.ORG

HOBBYMAGAZINES.ORG

the secrets to building Square Assemblies

Most woodworking projects require square construction. Even the ones with curved parts usually have a few 90° corners. So keeping your right angles "right" is an essential part of the building process. Here are a few techniques that I make a habit of using to help keep things square from start to finish.

▼ By grouping your project parts together on a flat surface, like your table saw, you can tell at a glance if they're square.

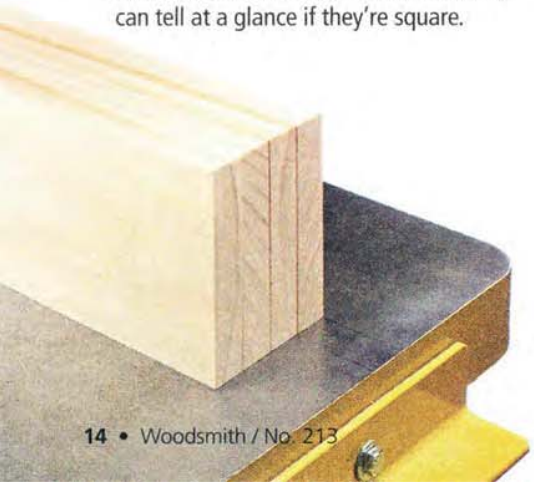

STOCK. It's hard to build a square project if you don't start with square parts. That's why I like to take a few minutes to carefully look over all the stock for the project. What I'm looking for at this point is warp, cupping, and twist in the boards. Each of these conditions can be dealt with, but I want to make sure I keep track of the problem areas so I can correct them if necessary.

MILLING. After inspecting the stock, you're ready to start milling. Even if you hand picked pieces of kiln-dried lumber at the lumberyard, you'll still need to mill them to make them square and flat. For instance, if a long piece of stock is warped, you can often salvage it by cutting it into smaller pieces and jointing and planing each piece flat. This is why it pays to inspect each piece of stock early. Fortunately, well-tuned power tools and a routine for using them properly will take you most of the way.

HOBBYMAGAZINES.ORG

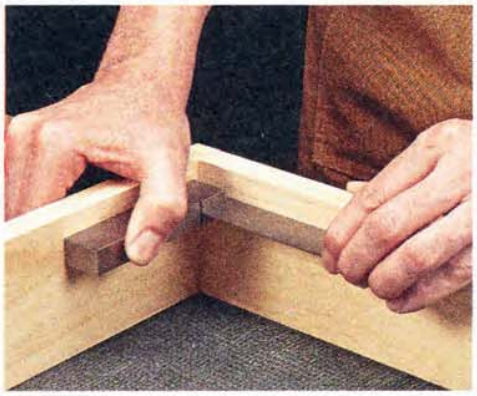

▲ An engineer's square is an inexpensive but very accurate tool for checking the corners for square during assembly.

Jointing one face and one edge gets you off on the right foot. Using those surfaces as references, you can then plane the opposite face parallel. Then head to the table saw and rip the opposite edge of the workpiece to guarantee a parallel edge, as well.

With properly milled stock, cutting parts to final size is pretty straightforward. Nevertheless, I like to keep checking them as I go. A simple way to do that is to line similar parts up on a flat surface, like your table saw, and see if they sit side-by-side with no gaps between the pieces. The photo at the bottom left of the opposite page shows what I mean.

JOINERY. Another plus of taking the time to carefully prepare parts is that cutting the joinery is easier. Whether you're using mortise and tenon joints, miters, or any other types of joinery, square stock ensures things fit together better.

ASSEMBLY

When you're ready to move on to assembling your project, there are a few more things to keep in mind to make sure things stay square. The best first step in creating a square assembly is a flat surface for the dry fit and final glueup.

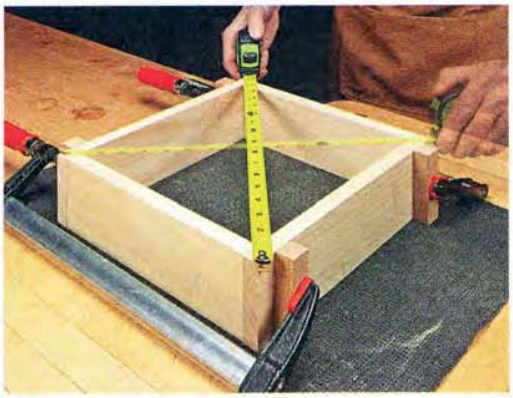

After applying clamps, use a measuring tape to check the distance between the corners. A square assembly has equal measurements.

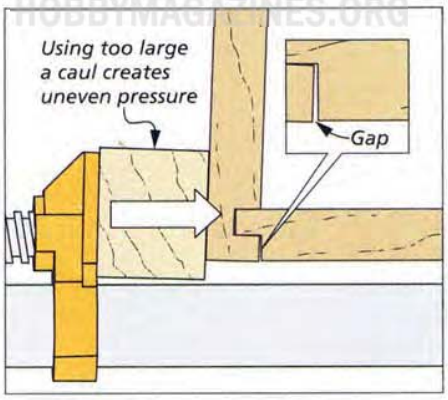

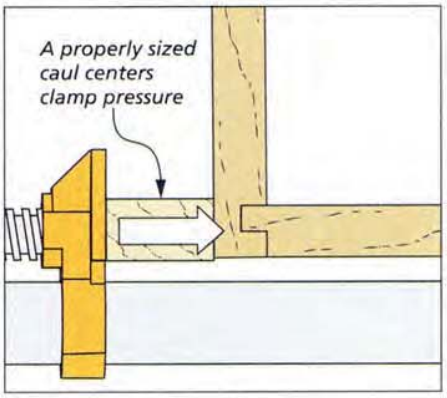

ASSEMBLY TABLE. A surface with dips or mounds can throw your assembly out of square. If your bench isn't up to the task, you can still find a flat surface just by covering your benchtop with an auxiliary surface made of MDF or melamine-covered particle board. A single piece sized to fit over your benchtop should be sufficient for most assemblies.

The box below shows another option — a shop-made jig for gluing up panels. It features a square corner formed by two fixed fences on one end and one edge. A sliding fence on the opposite end allows you to square up the assembly before adding clamps.

PROCESS. I use a simple assembly routine. Start by laying out the clamps required to hold the pieces together. At this point, you should prepare any cauls you need. I also make sure to have an engineer's square handy to check the joints, as shown in the right photo on the opposite page.

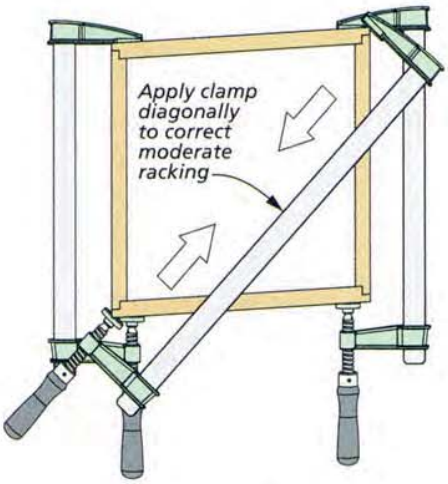

CAULS. Cauls are assembly aids that protect the surfaces of your project and distribute clamping pressure evenly. They can be made from just about any material you have in the shop. The important thing to remember when adding a caul is that the force of the clamp must be aligned with the joint, as shown in the drawings at the top of the page.

AFTER CLAMPING. Even after you've applied the clamps, you can still check and adjust the assembly. I use a tape to check for square (photo above, left). By measuring from corner to corner on opposite sides, you should get an identical measurement. If not, you can tweak the assembly using a clamp as shown in the drawing above.

OTHER TIPS. For cabinets and other casework, I often use plastic assembly squares, like the ones shown in the main photo on the opposite page. A clamp on each leg of the square holds two workpieces in place while you add the clamping pressure to the joints.

Using these techniques, you can make sure your projects turn out as expected. And that means fewer last-minute "fixes" down the road.

HANDY PANEL SQUARING JIG

An easy-to-make assembly jig will help you keep your projects square. The key is the square corner formed by the fixed fences on one edge and end.

Woodsmith GO ONLINE EXTRAS

For details on building this squaring jig, visit our website at Woodsmith.com.

HOBBYMAGAZINES.ORG

Weekend Project

freestanding Towel Rack

Simple styling and a practical design are on full display in this elegant towel rack. Its narrow profile makes it a great fit in any room.

In today's world, many people would associate a freestanding towel rack as an amenity they might see only in a luxury hotel. Or maybe even as a relic from a bygone era. This attractive and functional piece, however, offers a refreshing change from the typical wall-mounted towel rack and would certainly look right at home in almost any setting.

Constructed of solid cherry, this towel rack is both stylish and durable. Its small size allows it to fit into tight spaces or against a wall. And the versatile design of this project means it can do double-duty displaying your favorite quilt or blanket (back cover).

The towel rack consists of two end assemblies. Each end assembly has a foot, a pair of legs, and an arched top. The feet are attached to the legs with mortise and tenon joints. Splines are used to connect the arched tops to the legs.

Five round towel bars stretch between the matching end assemblies. To make the towel bars, I used a clever process that turns a square blank into a dowel by using a roundover bit in the router table. You'll read more about this operation later on. Mortise and tenon joinery is again used to hold the towel bars to the end assemblies.

BUILDING THE LEGS

With the exception of the ¼"-thick splines, all of the parts for the towel rack are made from 1"-thick cherry. So I planed down enough 5/4 stock to complete the entire project. You can then turn your attention to making the parts.

HOBBYMAGAZINES.ORG

HOBBYMAGAZINES.ORG

LEGS. Start by cutting the four leg blanks to the dimensions shown at right. Normally I prefer to cut mortises before I cut matching tenons. But since the feet are made later, I decided to go ahead and cut the tenons on the bottom of the legs now. The How-To box at the bottom of the page shows you the process of forming the tenons.

Make the cheek cuts first with the legs flat on the saw table. Then flip them up on edge to make the shoulder cuts. I used a shoulder plane to clean up the cheek and shoulder of each tenon. A chisel can be used to chamfer the tenons if desired. This will ensure a good fit when installed in the feet later on.

SPLINE SLOTS. As I said earlier, 1/4"-thick splines are used to hold the arched top sections to the legs. The spline slots on the top edge of all four legs are made using a slot-cutting bit installed in the router table. This step is shown in the middle box below. Be sure to use a backer board behind each leg to minimize the possibility of tearout as the slot-cutter exits the leg blank.

CUT THE MORTISES. Each leg also receives two mortises cut on the inside face. These mortises hold the towel bars later on. As shown in the right drawing below, I drilled out the waste for all of the mortises at the drill press. I then squared up the corners with a chisel. Make sure the walls are as smooth as possible to ensure a good glue bond when the towel bars are installed.

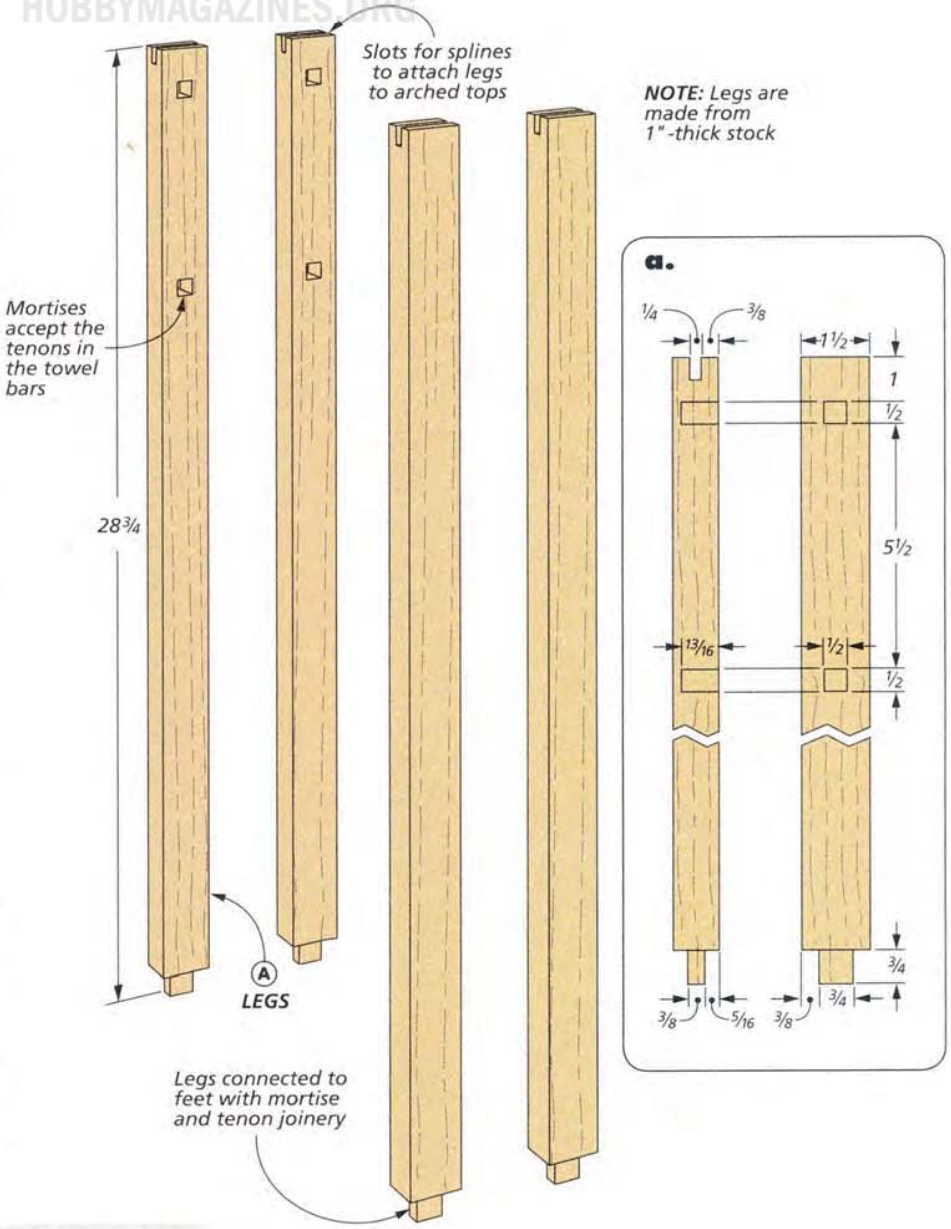

How-To: MAKE THE LEG JOINERY

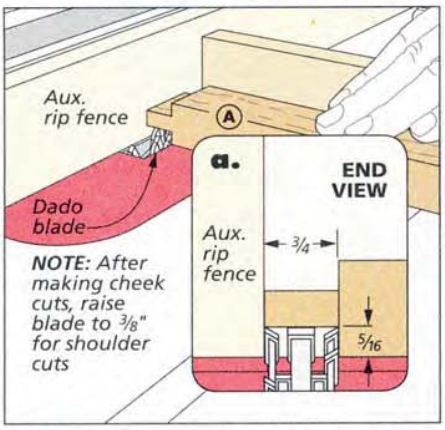

Tenons. Make the cheek cuts with the legs laying flat on the table saw. Stand them on edge for the shoulder cuts.

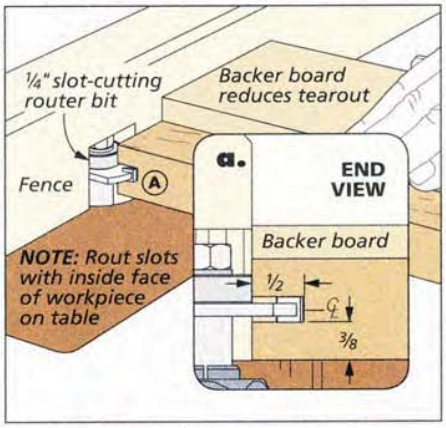

Spline Slots. A 1/4" slot-cutting bit in the router table makes quick work of cutting the spline slots in the legs.

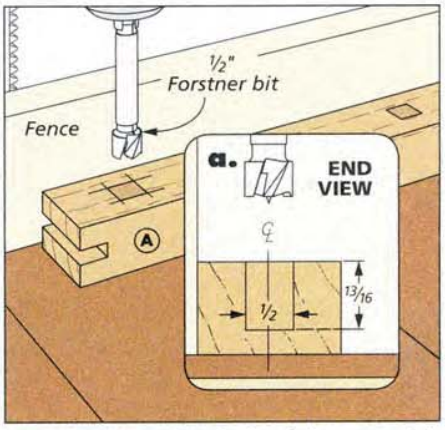

Leg Mortises. The bulk of the material for the two mortises on each leg can be removed at the drill press.

HOBBYMAGAZINES.ORG

Adding the ARCHES

With the legs completed, you can turn your attention to building the arches that join the top of the legs together. Since the end assemblies of this towel rack are only six inches wide, perhaps the simplest way to make the arches is to find a piece of stock wide enough and flat enough for the size you need. Unfortunately, no matter how you lay this out, some part of the arch would have weak cross grain.

That's why I opted to make segmented arches. By gluing the segments together at the end grain, you avoid the weak cross-grain joint. Of course, gluing end grain to end grain comes with its own set of issues. This too, makes for a weak connection. To solve this problem, I simply used wood splines to strengthen these joints.

CUT THE SEGMENTS. The key to making a segmented arch is cutting the miters as accurately as possible. If the scale on your miter gauge is less than precise, like mine, you may want to use a protractor to get the angle just right.

Using an auxiliary fence clamped to the miter gauge, I cut the miter on one end of each segment. I then clamped a stop block with a matching miter to the auxiliary fence, as shown in the How-To box below. The stop block ensures that the segments are the same length and the mitered end allows the stop block to hold the segment against the miter gauge. I also used a piece of adhesive-backed sandpaper on the auxiliary fence to keep the piece from moving during the cut.

SPLINE SLOTS. With the segments cut to size, I again turned to a slot-cutting bit to cut the spline slots in each segment. Use a miter gauge at the router table to guide the workpiece through the bit. An auxiliary fence backs up the cut to prevent tearout (below).

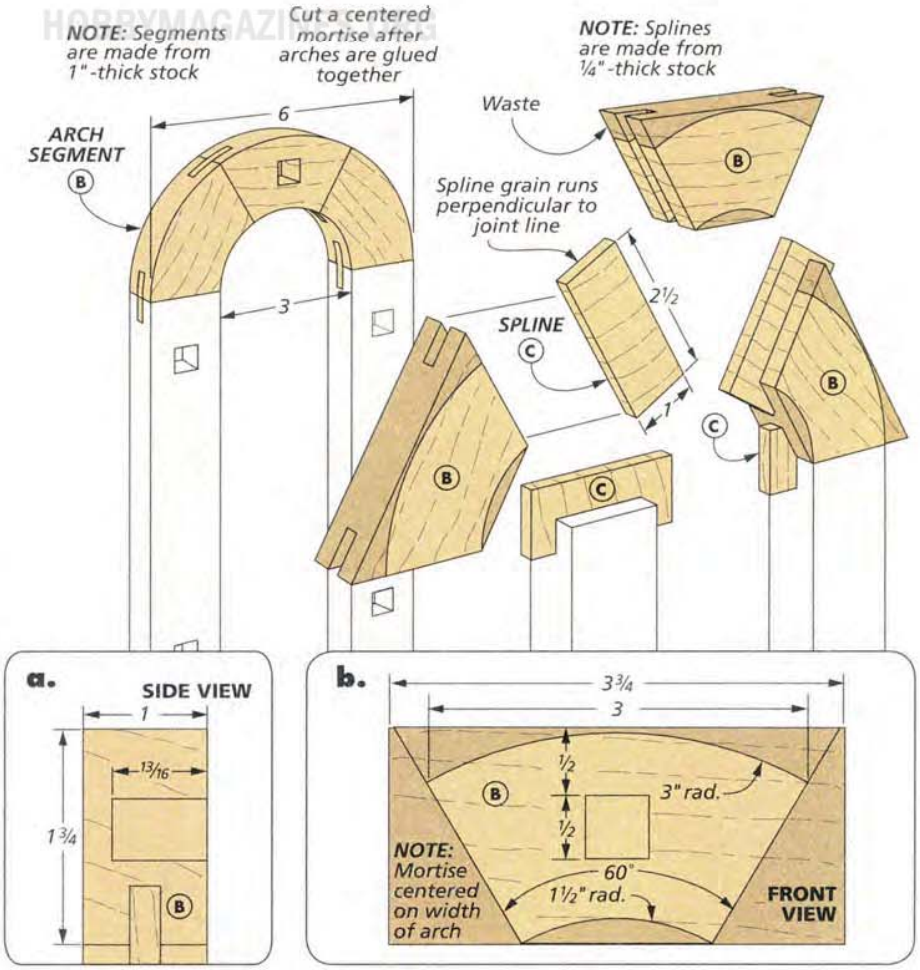

How-To: MAKE THE SEGMENTS

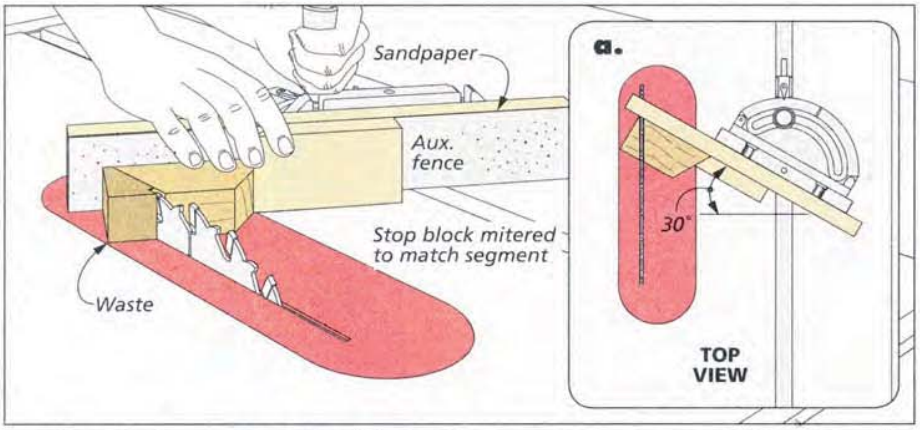

Cutting the Segments. A stop block with a matching miter cut on the edge will "cradle" the segments and keep them from moving during the final cut. Take extra care when setting the angle on the miter gauge.

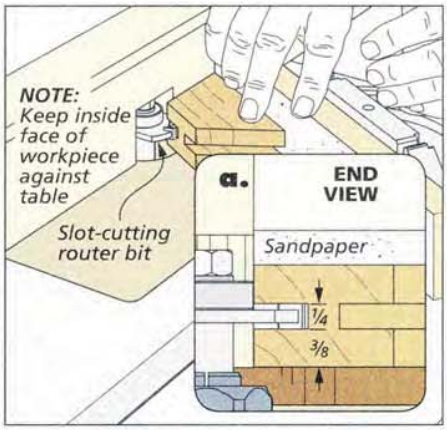

Slots at Router Table. Keeping the inside face of each segment against the table ensures consistent slots.

HOBBYMAGAZINES.ORG

MAKING THE SPLINES. The key to a strong spline joint is making sure the grain direction of the spline runs perpendicular to the joint line. This keeps the grain direction inline with the segment pieces for maximum strength.

You could plane a piece of stock down to ¼"-thick and trim the splines off the end. But I chose to cut them as shown at right using some of the 1"-thick stock I had planed earlier. Just be sure to use a piece of stock that is wide enough so the splines extend all the way through the slots when inserted in the arch segments.

The splines should be a snug fit in the slots. You can sneak up on their final thickness by lightly sanding the face of the splines on a flat surface.

ASSEMBLE THE ARCHES. Now that the splines are made, the arch segments can be glued together. Even with the splines in place, getting the angled joints to stay aligned can be a bit tricky. So I made the simple assembly jig shown in Figure 3. It keeps the segments aligned and places adequate pressure on the joints while the glue sets up. Turn to Shop Notebook on page 32 for more on how to build and use this assembly jig.

TWO MORE MORTISES. After the arch segments come out of the clamps, see detail 'b' on the previous page to lay out the mortises on the inside face of each middle segment. While you're at it, you can lay out the inside and outside curves of the arches as well.

As with the other mortises, I removed the bulk of the material with a Forstner bit, as shown in Figure 4, and cleaned up the edges with a chisel.

SHAPING THE ARCHES. Now you can move to the band saw and cut the arches to shape. Be sure to stay to the waste side of the cut line (Figure 5). Clean up the saw marks on the outside edge with a disk sander (Figure 6). A spindle sander works well for the inside curve. While sanding, I periodically checked the width of the arches to the legs to ensure a good fit.

GLUE ARCHES TO LEGS. With the splines in place, the arches can be glued to the legs. To keep the assemblies from racking, I clamped them flat to my workbench, as shown at right. A couple of 3"-long spacers clamped between the legs provides an extra clamping surface and keeps the correct spacing.

How-To: ASSEMBLE ARCHES

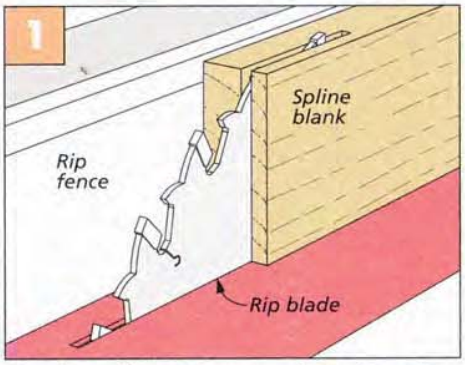

Rip the Splines. Resaw a piece of stock to size for the splines. Use a push stick to move the board through the blade.

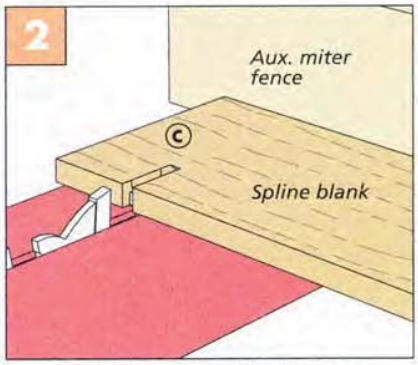

Slice the Splines. Adjust the table saw blade lower and cut the splines from the end of the board.

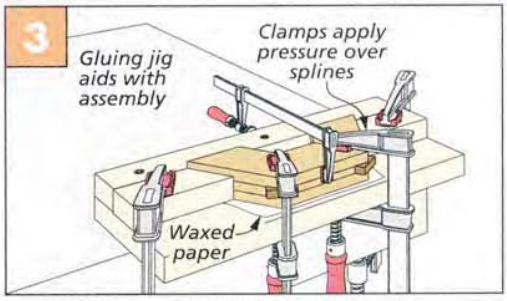

Arch Glueup. The jig keeps segments aligned during glueup. Waxed paper keeps segments from sticking to jig.

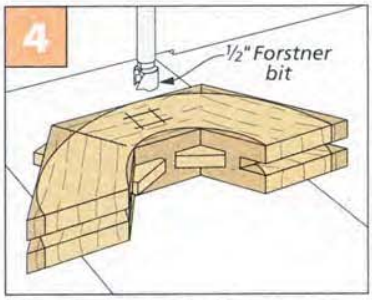

Mortise in Arch. Cut one more mortise in the middle segment of each arch.

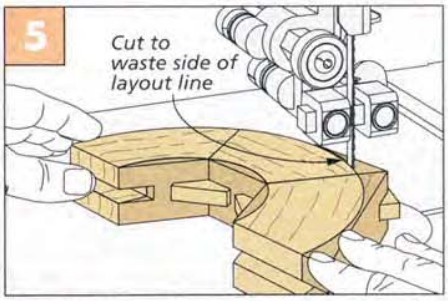

Cut Arch. Staying to the waste side of the line, cut the curves on the inside and outside edge of each arch.

Sand Smooth. A disk sander makes quick work of sanding to the layout lines on the outside edge.

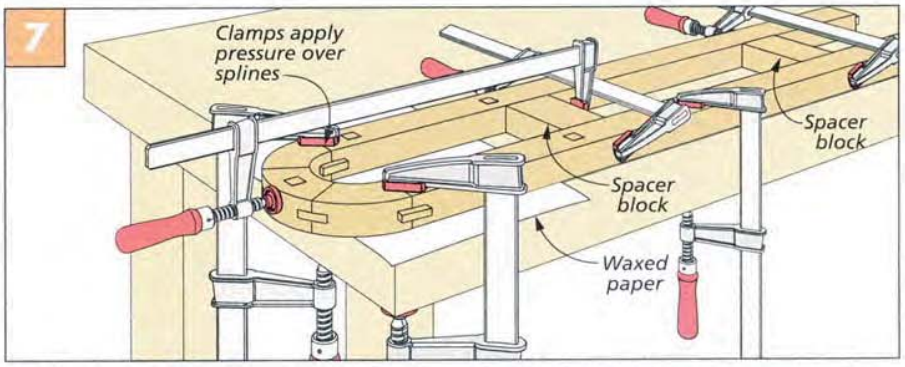

Glue to Legs. After gluing the splines in the slots, clamp the entire assembly to a flat surface to keep it from racking. The upper spacer block also provides a clamping surface for the arch clamp. Wax paper keeps assembly from sticking to table.

HOBBYMAGAZINES.ORG

Making the **FEET & ASSEMBLY**

There are just a couple more components to add to the towel rack. The next parts to go on are the profiled feet. These pieces need to be perfectly flat to ensure the entire rack doesn't wobble when completed. The towel bars will then be shaped using a roundover bit at the router table. But before getting too far ahead of the process, there's one more step to complete on the legs and arches.

COVED PROFILE. Using a hand-held router, I added a cove to all four edges of each end assembly. Following the simple rule of thumb used for routing frames makes this a snap. Move the router in a counter-clockwise direction to rout the outside edges (lower left drawing), and the opposite direction (clockwise) to rout the inside edges. This ensures that you rout in the direction against the rotation of the bit, giving you more control through the entire cut.

TWO FEET. After routing the coves on the legs and arches, you can turn your attention to making the two feet for the end assemblies. I started by cutting a single blank to finished length and wide enough to accommodate making both feet. Be sure this piece is perfectly flat on the bottom face so the towel rack is stable when assembled.

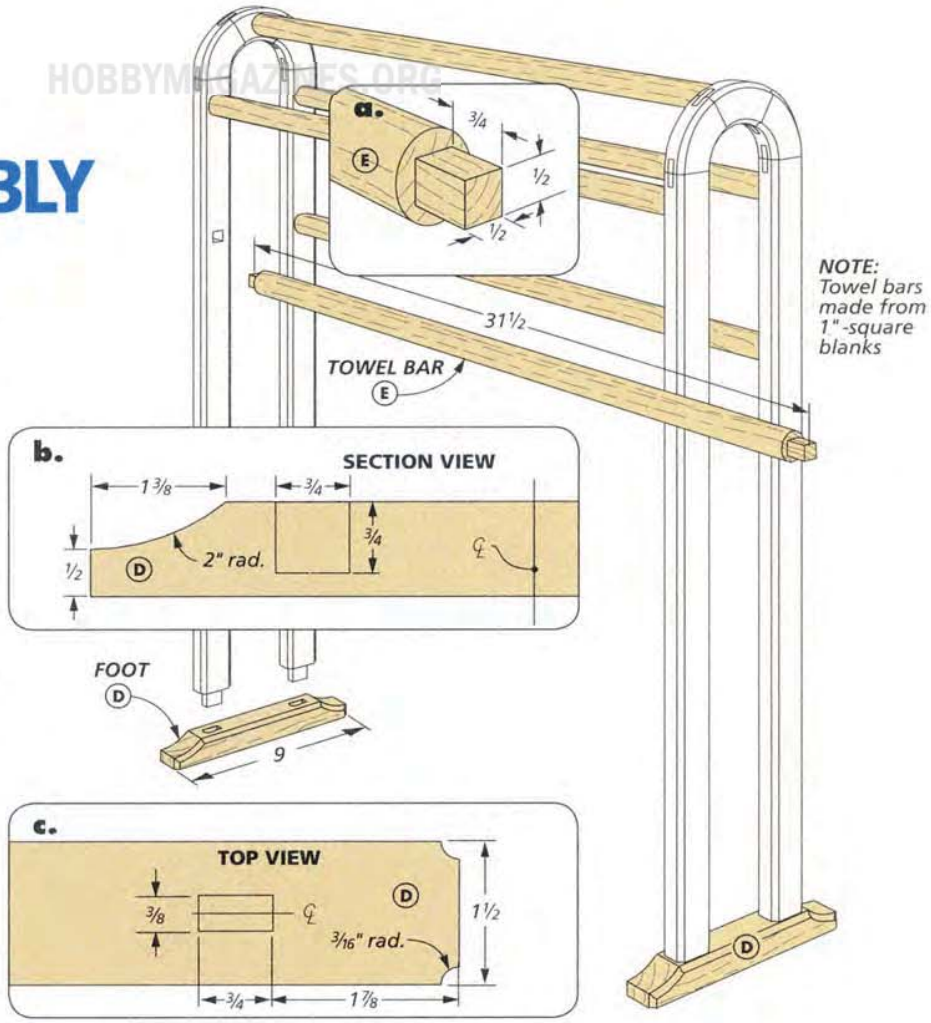

PROFILED FEET. Using the dimensions above, lay out the curved profile on both ends of the blank. This curve is cut at the band saw (middle drawing, below), being sure to stay to the waste side of the layout line. A sanding drum does a nice job cleaning up the saw marks.

RIP THE FEET APART. Next I moved to the table saw and used the rip fence to cut the feet apart, as shown in the right drawing below. This brings the feet to their final width. You'll need a push block with a deep "heel" (below) in order to reach below the profiled ends.

How-To: END & FOOT DETAILS

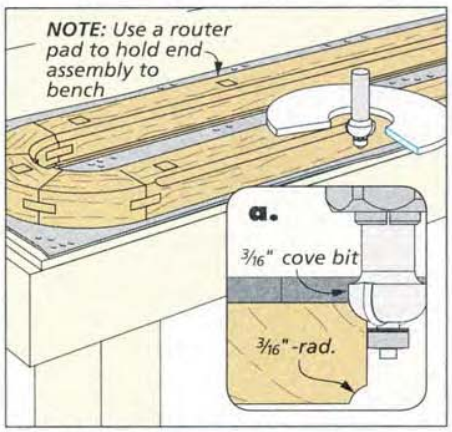

Rout Side Assembly. Move the router in a counter-clockwise direction to rout the outside edge of the end assembly.

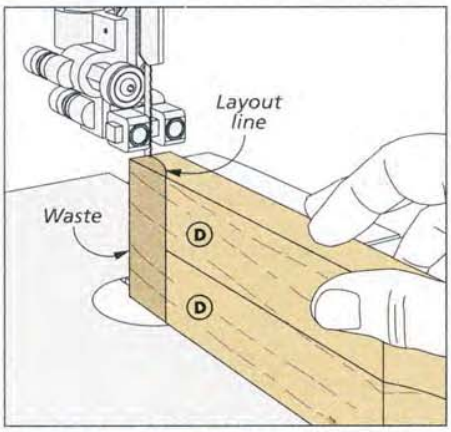

Band Saw Foot Profile. With the foot blank on edge, cut the profile on each end. Stay to the waste side of the line.

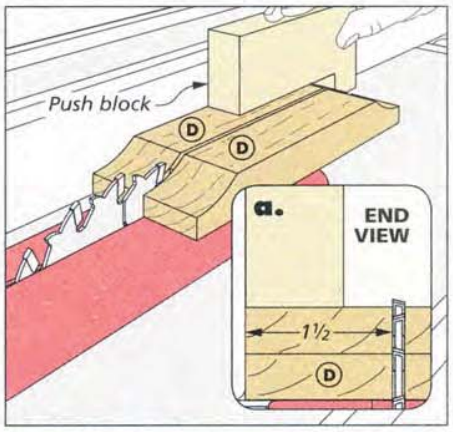

Cut Feet Apart. Rip the two feet apart at the table saw. Use a push block for this cut to keep your hands clear.

HOBBYMAGAZINES.ORG

With the two feet cut apart, you're on the home stretch. There are just a couple more details to add to the feet to match the look of the end assemblies.

MORTISE THE FEET. The tenons that were cut earlier on the bottom of each leg fit into a pair of mortises cut on the top face of the feet. To guarantee a perfect fit, I used the legs to lay out the mortise locations on each foot.

It helps to label or place a registration mark on the parts (box, lower left) to make sure the same foot and leg assembly are mated up when it's time to glue them together. Again, the drill press and a chisel makes quick work of cutting the mortises in the feet.

COVED PROFILE. The next order of business is to rout the edge of each foot with the same cove profile used on the leg assemblies. This is best done at the router table with the workpiece sitting on its side (middle box, below).

Since the bit exits the cut on the end grain of the foot, I attached a scrap piece to the bottom face with double-sided tape to eliminate any tearout issues. The feet can now be glued to the legs.

HOBBYMAGAZINES.ORG

SQUARE BLANKS. The towel bars are the final pieces to make. They start as square blanks cut to final length. Like the bottom of the legs, cut a tenon on each end at the table saw, lower right box.

I used a roundover bit in the router table to make the towel bars perfectly round. To see more about how this is done, check out Shop Notebook on page 32.

ASSEMBLY. In order to keep the whole stand "square" during assembly, I followed the steps shown at right. It takes a number of clamps to hold this project together, but the payoff is a towel rack that sits flat on the floor without wobbling.

FINISH. I applied a stain to my towel rack and gave it a couple coats of lacquer as a top coat. To see more about the finishing process, see Sources on page 51. W

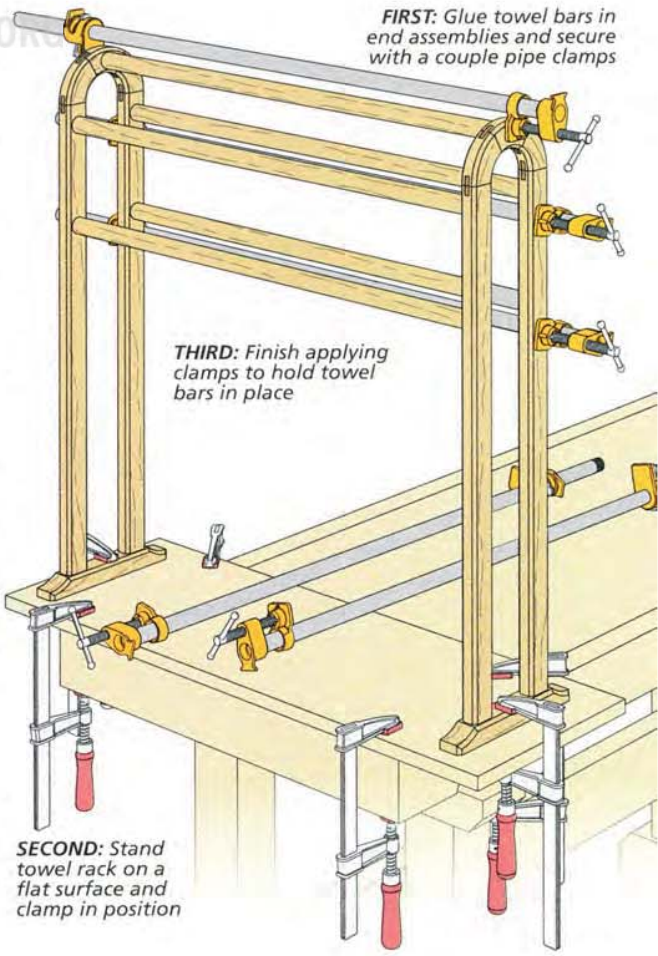

How-To: FINAL FOOT DETAILS

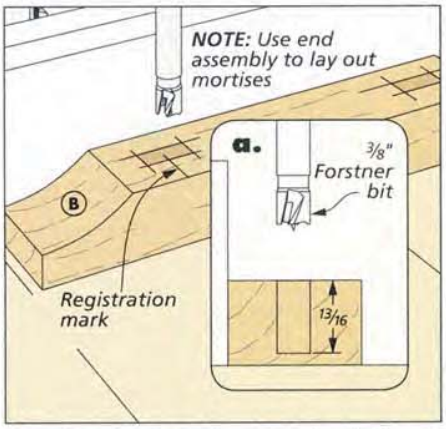

Mortises in Foot. Remove the bulk of the waste at the drill press and clean up the mortises with a sharp chisel.

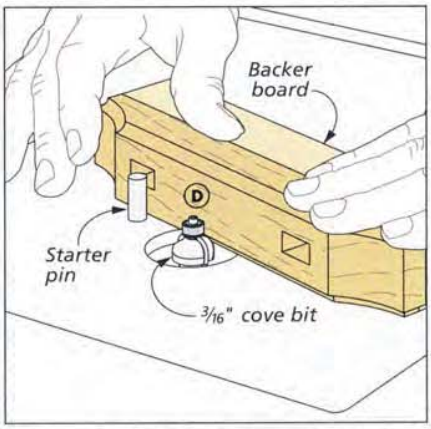

Rout Cove on Foot. Stand the foot on edge to rout the cove profile. Use a backer board to avoid tearout.

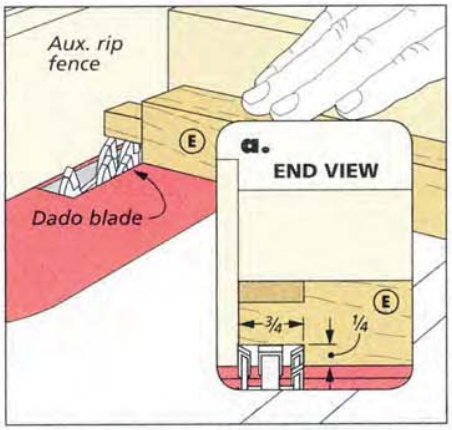

Tenons on Towel Bars. The tenons on the ends of the towel bars are easy to form with a dado blade in the table saw.

Materials, Supplies & Cutting Diagram

A	Legs (4)	1 x 1½ - 28¾
B	Arch Segments (6)	1 x 2 rgh. - 3¾
C	Splines (8)	¼ x 1 - 2½ rgh.
D	Feet (2)	1 x 1½ - 9
E	Towel Bars (5)	1 x 1 - 31½

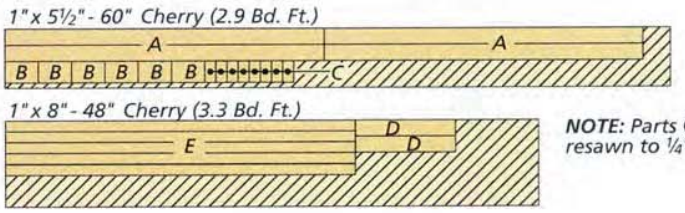

NOTE: *Parts C are resawn to ¼" thick*

HOBBYMAGAZINES.ORG

Outdoor Project

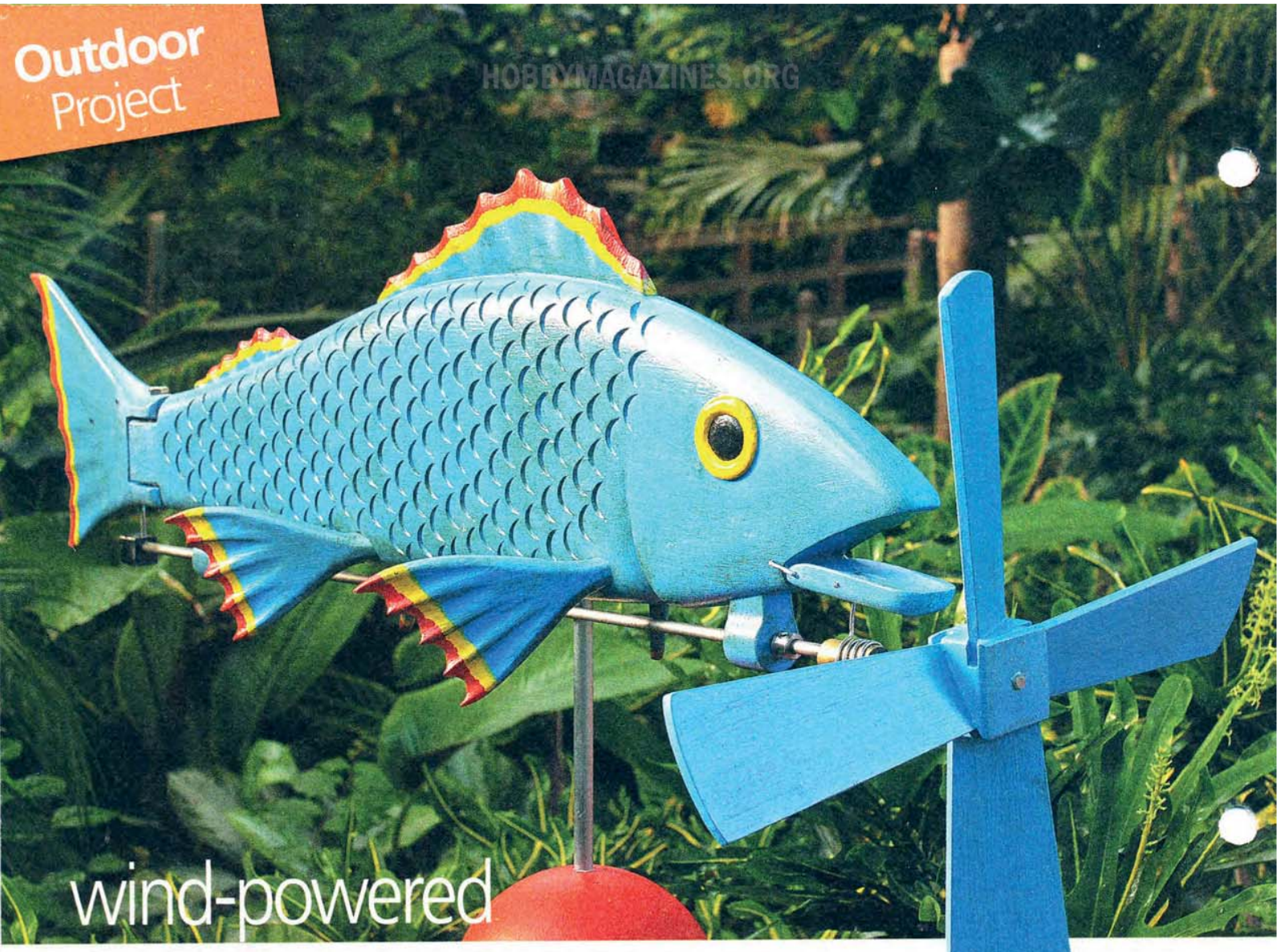

wind-powered

Fish Whirligig

Here's a great opportunity to take a detour from the ordinary and dip your toes in the whimsical waters of folk-art projects.

It's difficult to determine the history of the whirligig. Certainly wind power was employed as a source of energy as far back as ancient Egypt and throughout history. So it stands to reason that the same engineers who devised wind-powered mills and wheels might have experimented with smaller prototypes before committing to a design. But no one can put their finger on the origins of moving sculptures powered by the breeze.

Suffice it to say that by the end of the Middle Ages, whirligigs had carved out a niche in Europe. And when European settlers came to America, they brought their designs with them. A folk-art tradition was born that exists to this day.

The whirligig shown above is the ideal project for experimenting with the basic components of a wind-powered machine. Starting with the propeller, energy is directed along the shaft to open and close the mouth of the fish and move the tail from side to side. Bearings seated in posts attached to the body ensure a high degree of efficiency.

The thing I enjoyed most about making the whirligig is that it's primarily a hand tool project. I used a band saw to cut the body to shape and a drill press to drill a few holes and power a sanding drum, but the bulk of the work was done with rasps, files, and gouges.

The key to success lies in using basswood for the project. It's extremely easy to cut and shape using hand tools. And although basswood is lightweight, it's tough enough to stand up to years of exposure to the elements.

HOBBYMAGAZINES.ORG

Construction Overview / OVERALL DIMENSIONS: 33⅛"L x 13¾"W x 15⅝"H

HOBBYMAGAZINES.ORG

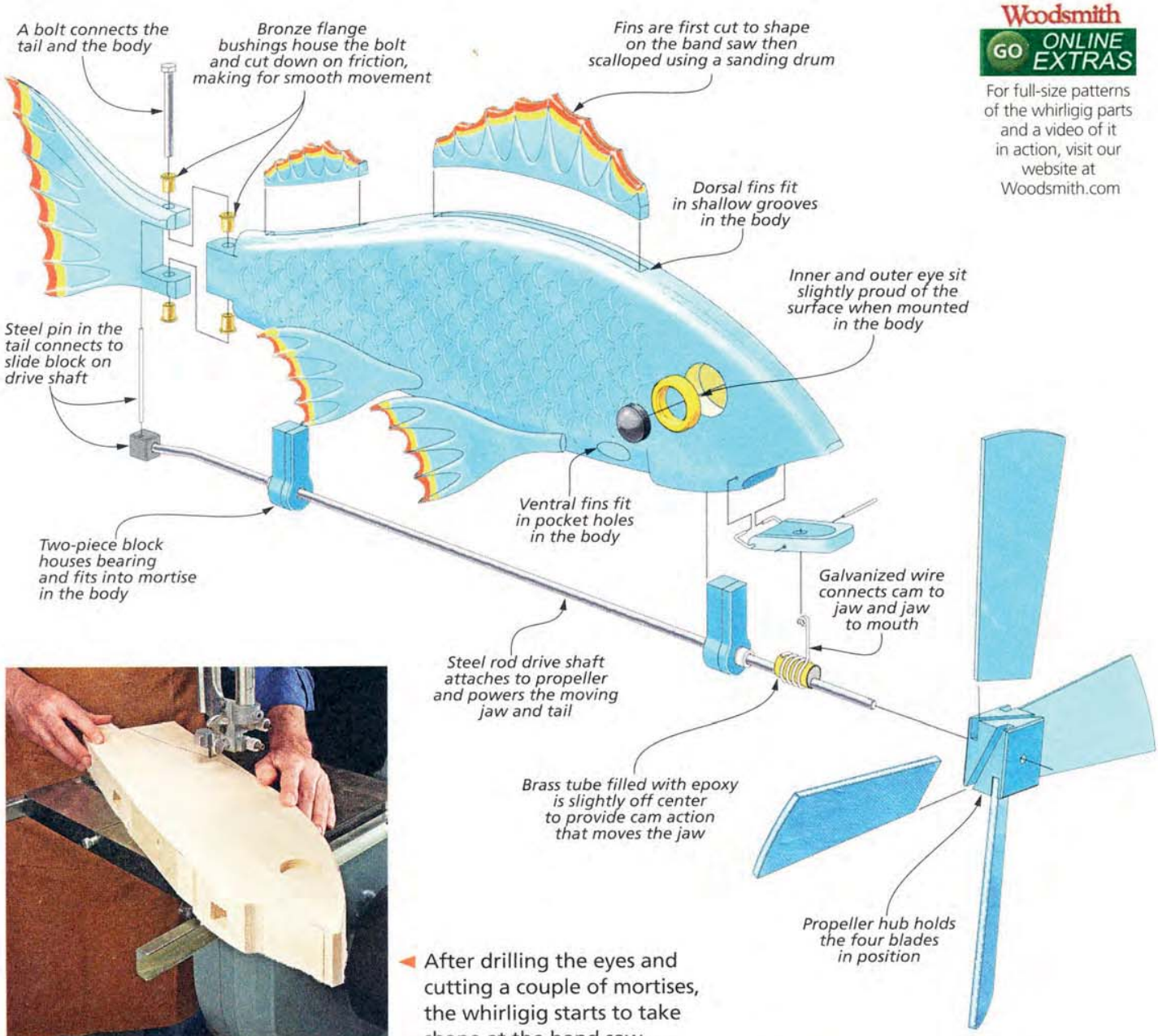

Woodsmith GO ONLINE EXTRAS

For full-size patterns of the whirligig parts and a video of it in action, visit our website at Woodsmith.com

◄ After drilling the eyes and cutting a couple of mortises, the whirligig starts to take shape at the band saw.

◄ With the body secured in a carving vise, you can refine the shape using rasps and files.

Carving the scales is a ► simple, two-step process with a gouge and mallet.

HOBBYMAGAZINES.ORG

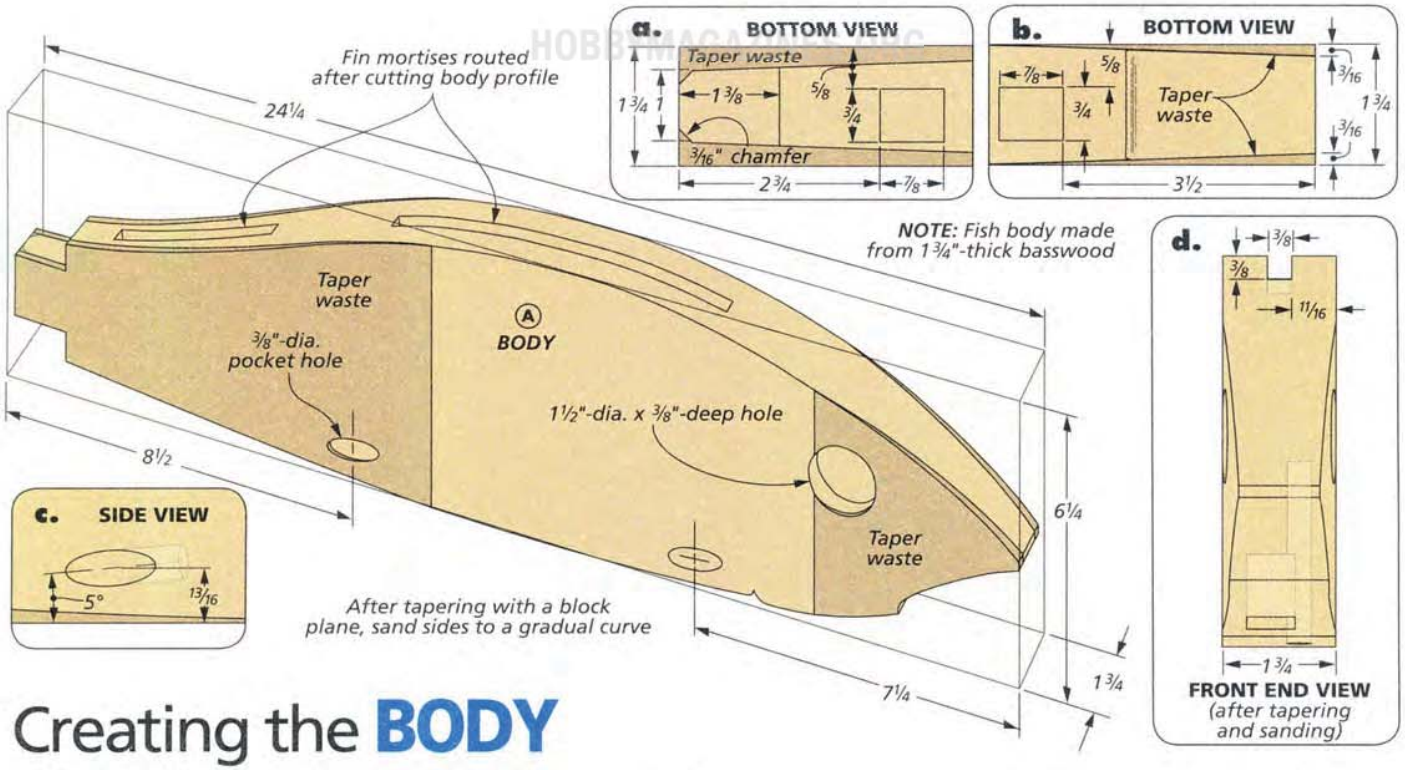

Creating the **BODY**

The body of the fish begins as a solid block of wood that is jointed, squared up, and planed to final thickness. There are a few things to do while the block is square, starting with cutting the mortises for the bearing posts and drilling holes for the eyes and ventral fins. Then you'll move on to shaping the body by cutting it out at the band saw and tapering the sides with a hand plane.

LAYOUT. The best place to start this project is at your computer. There are several patterns for the fish and some of its parts on our web site. You'll want to download the full-size patterns and print a couple copies of each to use when laying out the shapes.

BODY BLANK. The woodworking begins when you cut a blank for the body. The main drawing above shows a ghosted view of the rectangular basswood blank before being cut to shape. The box below illustrates the steps you need to take before shaping the body.

MORTISES. The left drawing below shows how I drilled out the holes for the mortises that will later house the bearing blocks. You'll notice that the holes are slightly off-center on the blank. This allows room for the mounting rod you'll add later. While you're at the drill press, you can switch to a 3/8"-dia. bit and drill the hole for the rod. The location and depth are shown on the pattern.

EYE HOLES. Next up are the eye holes. As you can see in the center drawing below, I set the fence on my drill press to position the blank. Drill the first hole, then flip the blank over, keeping the same edge against the fence, and drill the hole on the opposite face. Detail 'a,' below shows the depth for both holes.

How-To: DRILL HOLES & MORTISES

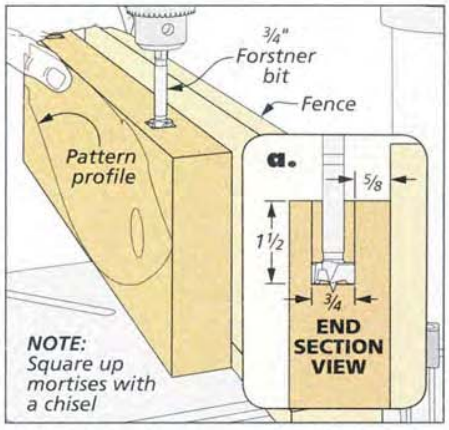

Mortises. After tracing the shape of the fish on your blank, drill the two mortises for the bearing posts.

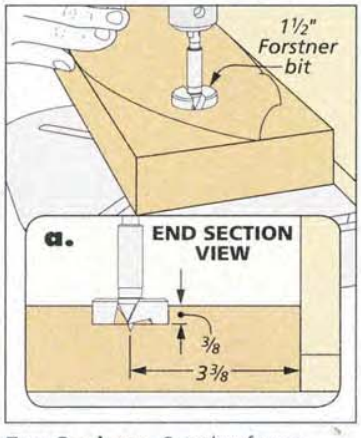

Eye Sockets. Set the fence on your drill press and flip the blank over for the second hole.

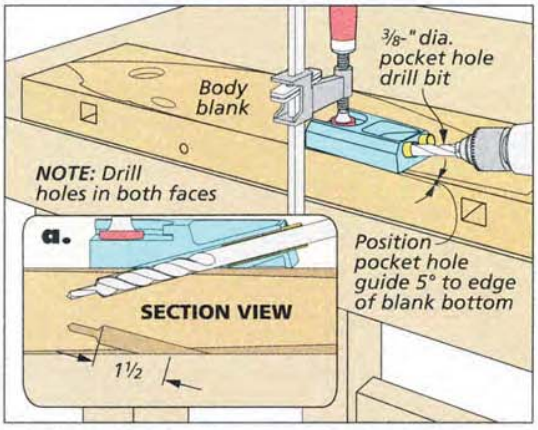

Drilling Pocket Holes. A pocket hole jig is the perfect tool for drilling the angled holes that hold the four ventral fins.

HOBBYMAGAZINES.ORG

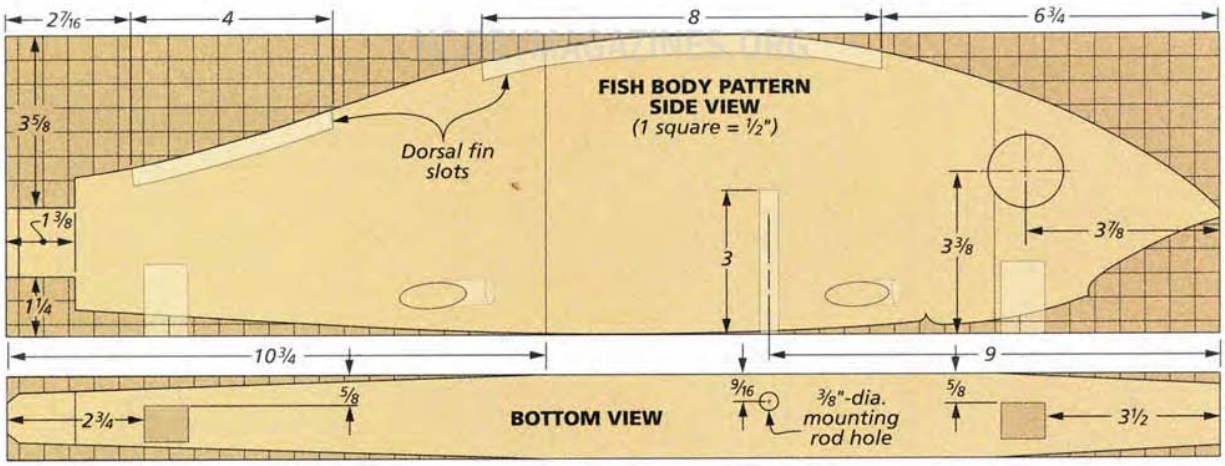

POCKET HOLES. The fins on the lower half of the body are mounted in angled holes. To drill these, use a pocket hole jig (lower right drawing, opposite page). Later, when you make the fins, you'll refine the ends to fit into these holes. But it's worth mentioning that you needn't be too fussy about the exact position. This is, after all, a fictional fish, and small deviations from the plan are acceptable.

TAIL TENON. With the holes all drilled and the mortises chopped, you're ready to start cutting the blank to shape. The first task is shown in Figure 1, at right. Here you'll use the band saw to cut the tenon that will hold the tail.

BODY. You'll remain at the band saw to cut the shape of the fish. There's nothing tricky about it. Just stay to the waste side of the cut, and you'll be fine. The basswood is very easy to cut (Figure 2).

CUT SLOTS. Figure 3 shows how you can use a slot-cutting bit at the router table to rout the shallow grooves for the dorsal fins. All you need to do is mark start and stop lines on the blank using the dimensions from the pattern and then plunge the bit into the body. When you reach the stop mark, pull the blank away and the result is a nice, clean groove. A little chisel work is all it takes to square up the ends of the grooves.

TAPER THE BODY. One of the little details that brings the fish to life is the gently tapered sides. If you look at the bottom view of the body in the pattern above, you can see how the front and back are both tapered from the middle of the body. At first glance, this might look difficult, but in fact it's completely straightforward. I just used a hand plane to plane away the waste. As I said before, the basswood makes this operation very easy to carry out.

All you need to do is mark the profile on the top and bottom edges of the blank and then start planing. I like to begin near the end and move each successive stroke back a hair further. This technique will not only remove the waste in a hurry, but you'll end up with smooth lines, as well. Figure 4 gives you an idea of what I mean.

At this point, you can start shaping the fish. There are some tips for doing this using files and rasps on page 46. After that, some hand sanding will help smooth things out. You can start with 100-grit to refine the curves, but don't get too carried away. Check your progress often by looking down from the top to see that your sides are consistent.

How-To: SHAPE THE BODY

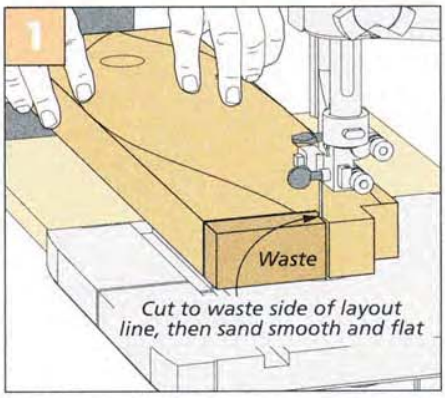

Tenon for the Tail. Cut the tenon on the end of the blank before cutting out the shape of the body.

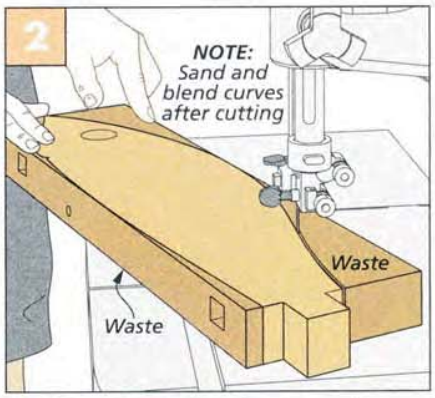

Cutting the Body. The sweeping curves of the body shape are easy to cut at the band saw.

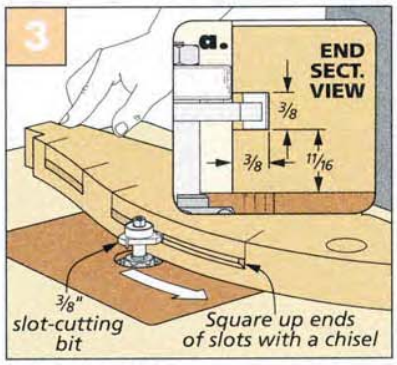

Slots for Fins. At the router table, install a slot-cutting bit and rout the slots for the dorsal fins.

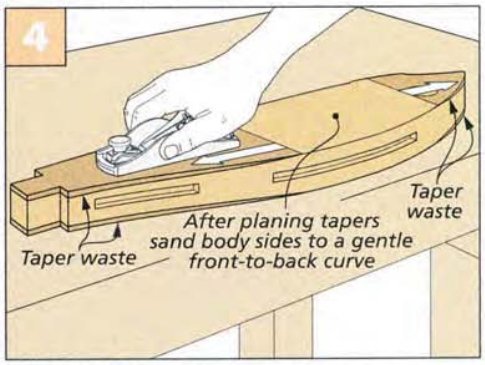

Adding Tapers. To taper the body, I started with a hand plane. The basswood body shapes quickly and easily.

HOBBYMAGAZINES.ORG

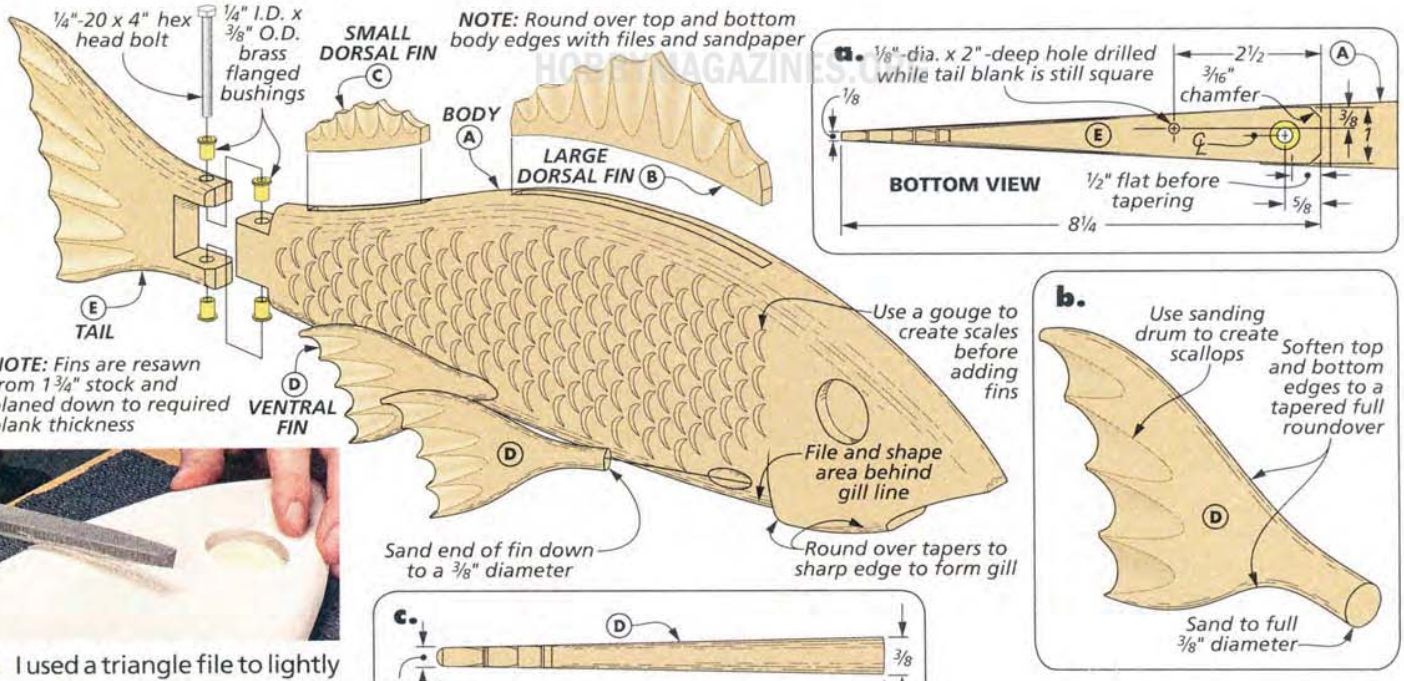

I used a triangle file to lightly mark the line between the head and the body.

add the SCALES, FINS & TAIL

There's still a lot of work to do before your basswood blank starts to resemble a fish. You'll continue shaping and refining the body with rasps, files, and sandpaper until you have a smooth surface. Then you'll add scales to the body and make some fins and a tail.

REFINING THE FISH. After you've finished tapering the body, the next step is to mark the gill line behind the head. In the photo above you can see how I used a file to mark the line. The left drawing in the box below shows how to use a rasp to remove the waste just behind the head and round over the transition point. You'll need to add the same sort of roundover on the head area in the region around the post mortise. The key to a good look is really in these transitional areas. So taking a few extra minutes here is time well spent.

Once you've completed work on the head and gill line, you can continue rounding over the body of the fish (center drawing below). A combination of filing and sanding makes short work of this job. As always, the idea is to shoot for a consistent, smooth edge.

SCALES. Now comes the fun part of the project — adding the scales. For this, you'll need a ¾" gouge with a No. 7 or 8 sweep and a mallet. I also recommend picking up a piece of scrap to practice on before taking on the real project.

It's not hard to make the scales, but it does take a few tries to get it right. The key is to start with the gouge straight up, perpendicular to the body. One or two good whacks with the mallet should drive the gouge deep enough into the workpiece to define the scale.

How-To: ADD GILLS & SCALES

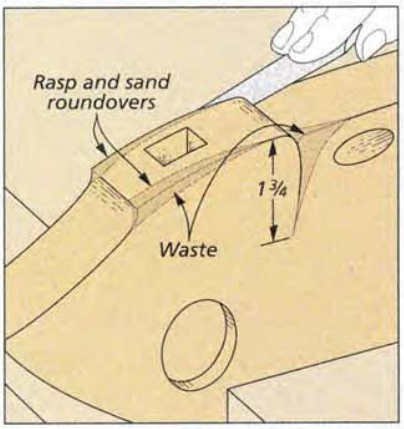

Gill Line Contour. Use a rasp to shape the area behind the gill line and the spot behind the jaw.

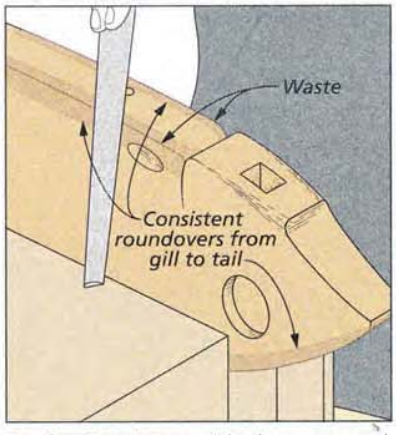

Body. Continue with the rasp and files to soften the edges of the body and smooth out transitions.

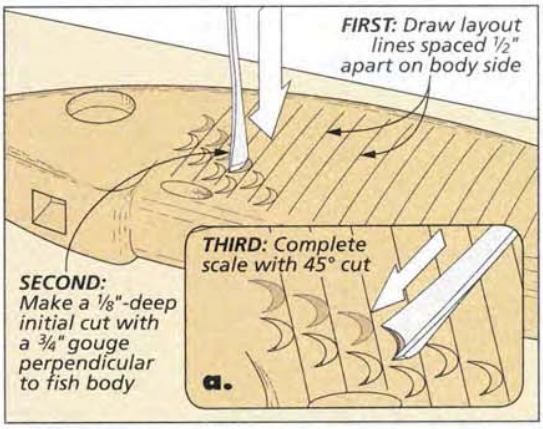

Cutting Scales. A gouge will help you knock out all the scales. The key is to make the first cut straight and the second angled at about 45°.

HOBBYMAGAZINES.ORG

To complete the cut, hold the gouge at roughly 45° slightly behind the initial cut and tap out a "fingernail" of waste from the scale. Like I said, a few practice strokes on some scrap wood will have you making scales in no time.

Before tackling the actual fish, I drew a series of layout lines as a guide for the scales. You can see what I mean in the right drawing at the bottom of the opposite page. I spaced the scales roughly ½" apart from front to back.

FINS & TAIL

With scales, the workpiece is starting to look like a fish. But the addition of fins and a tail will really bring it to life. The six fins on the body and the tail all rely on the same cutting and shaping technique. You'll need to taper each piece, then cut out the shape. Finally, by using a sanding drum, you can scallop the fins to give them a more realistic look. The step-by-step instructions for each operation are in the box at right.

BLANKS. I started by planing some stock to the three different thicknesses needed to make the tail and fins. The dorsal fins start as ⅜"-thick blanks, and the ventral fins are ½" thick. For the tail, you'll need a 1"-thick blank.

CUT OUT THE SHAPES. Figure 2 shows how you can use the band saw to cut each of the fins to final shape. Note that the tail also requires a notch to fit over the tenon on the body.

SANDING DRUM. I used a sanding drum in the drill press to ease the edges on the fins and tail (Figure 3). Be sure to use caution when sanding the pieces, first to avoid contacting the drum with your fingers. But also be mindful of how quickly the drum removes material from the basswood blanks. A light touch is all you need.

When you're ready to scallop out the waste in the fins and tail, Figure 4 shows the technique. This step is all about maintaining the right angle when sanding.

ASSEMBLY. It's a good idea to install the tail first. This way, there's nothing to get in the way as you drill the hole through the tail and tenon on the body. After drilling the holes, install the four brass flanged bushings that house the bolt. Figure 5 shows the drilling setup. After that, you can install the dorsal and ventral fins with a little glue.

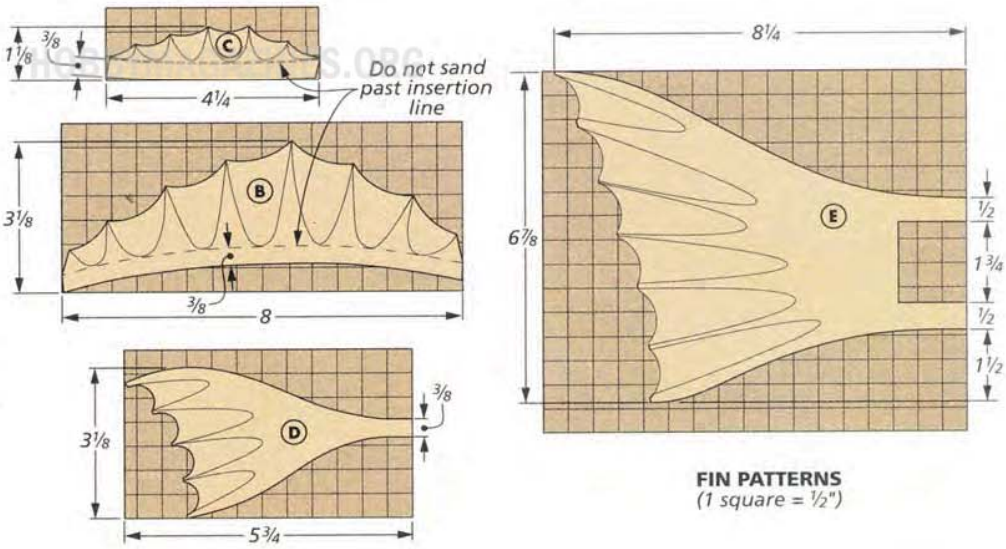

FIN PATTERNS
(1 square = ½")

How-To: SHAPE & ADD THE FINS

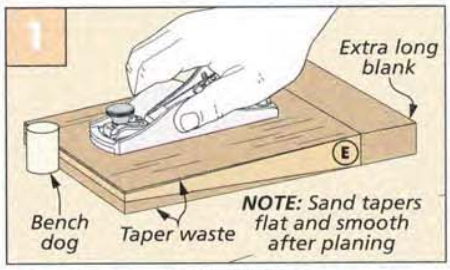

Tapering the Tail. With lines on the side of the blank to show the taper, plane away most of the waste.

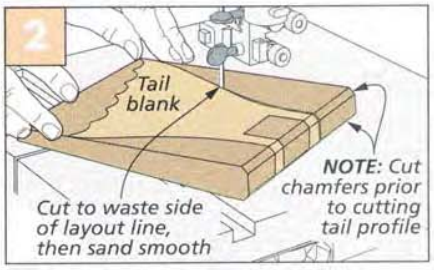

Cut to Shape. Trace the patterns for the fins and tail on the blanks and cut them out at the band saw.

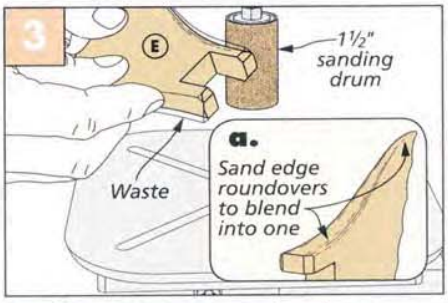

Sanding Drum. A sanding drum installed in the drill press is the perfect tool for rounding over the edges.

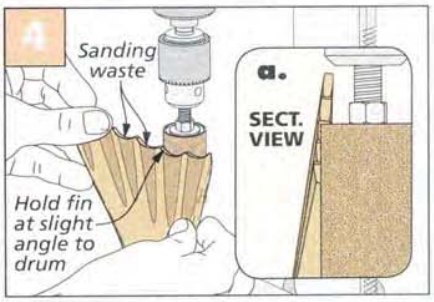

Scalloping. The sanding drum removes waste in a hurry, so a light touch is needed to scallop the fins.

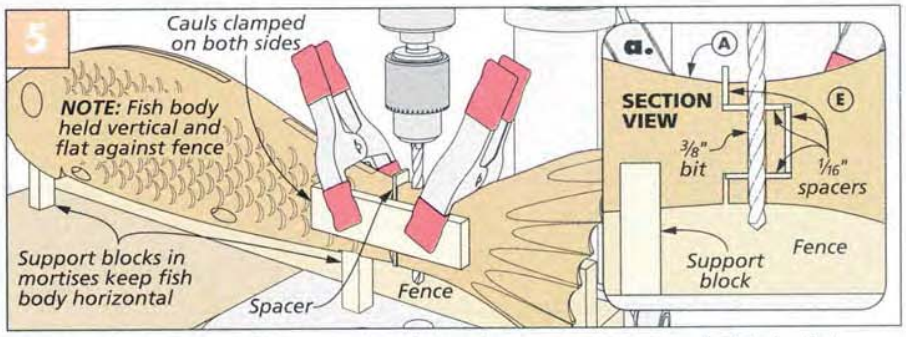

Drilling the Tail. With support blocks in the post mortises to hold the fish horizontal, install a ⅜" bit in the drill press. Then position the tail on the mortise and secure it with a pair of cauls on the sides to hold everything in place.

HOBBYMAGAZINES.ORG

HOBBYMAGAZINES.ORG

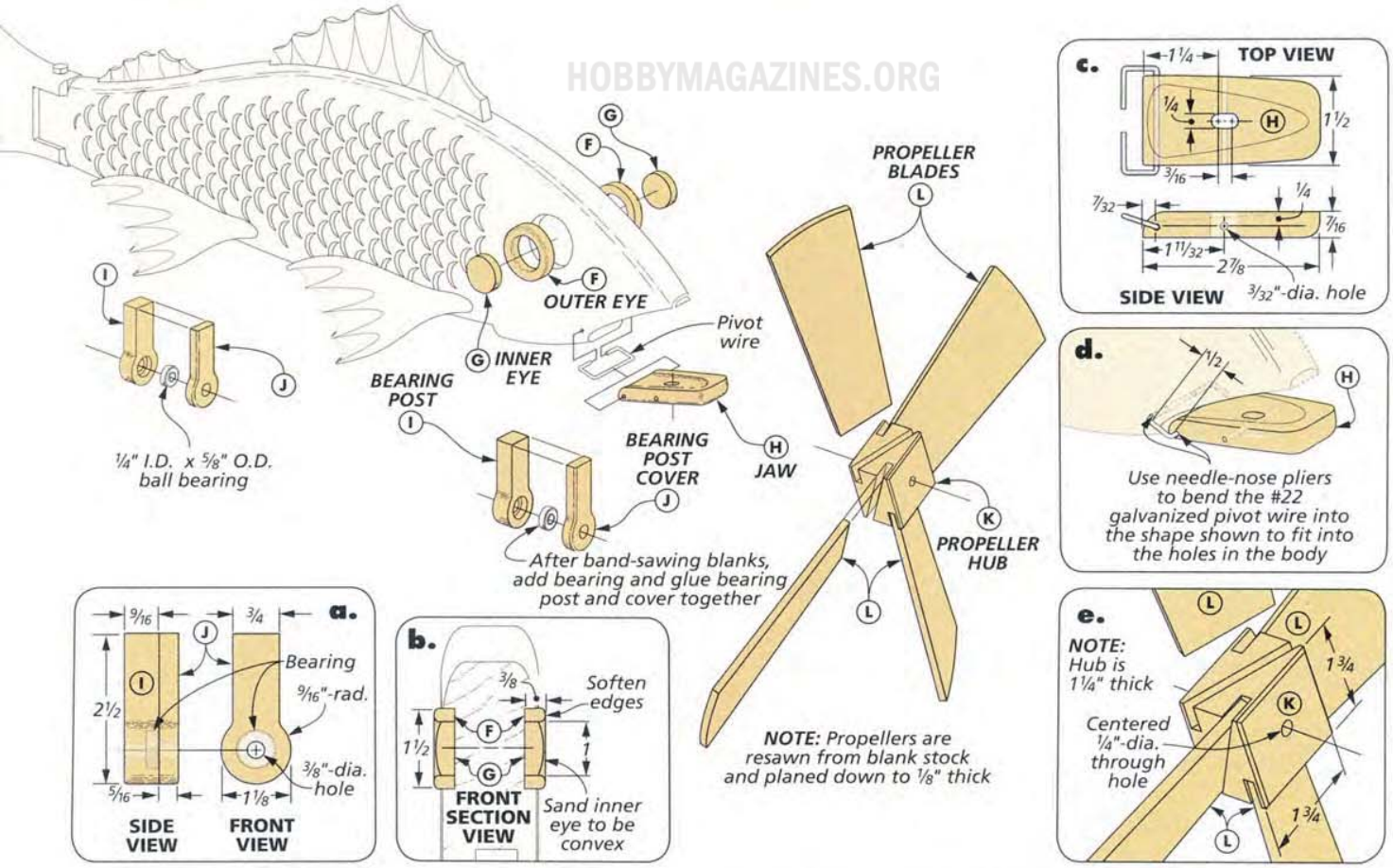

Making the PROPELLER & BODY DETAILS

What's a whirligig without a propeller? Just a boring wood fish. Fortunately, this whirligig is fully equipped with a shop-made propeller. It powers a drive shaft that animates the fish's mouth and tail. But before moving on to the drive assembly, there are still a few things to take care of cosmetically. It starts with a pair of fish eyes to complete the look and two bearing posts to hold the ball bearings that allow the drive shaft to spin freely with the wind.

EYES. I made two-part eyes so I could use two different colors of paint to make them stand out from the body of the fish. The outer eye is simply a ring that fits around the inner eye. The box below shows you how to make them both. A little hand sanding is all it takes to refine the shapes. Then glue them in place.

LOWER JAW. A moveable lower jaw is attached to the mouth of the fish with wire (details 'c' & 'd'). Another length of wire runs through center of the jaw and is clipped at the ends. This wire attaches to the mouth linkage later on.

I started by laying out the shape of the jaw on a small scrap of 7/16"-thick stock. Figure 1 on the opposite page shows how to set the fence on the drill press

How-To: MAKE THE EYES

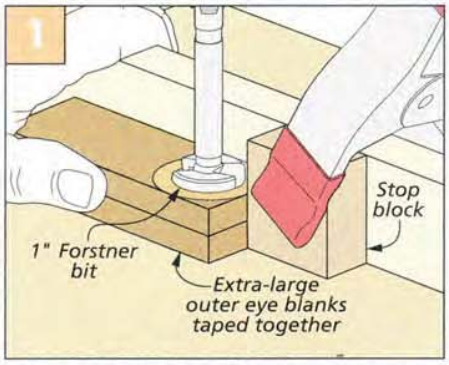

Outer Eye Blanks. Use a fence and a stop block on the drill press to position the two outer eye blanks.

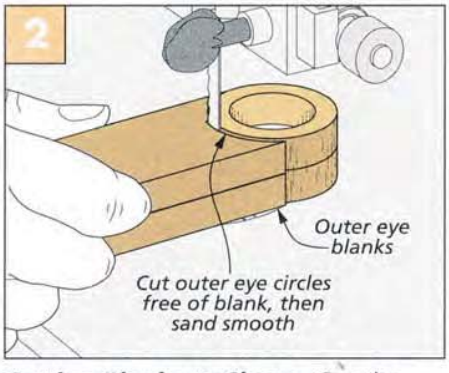

Cutting Blanks to Shape. Cut the outer eyes at the band saw. Smooth them with a little hand sanding.

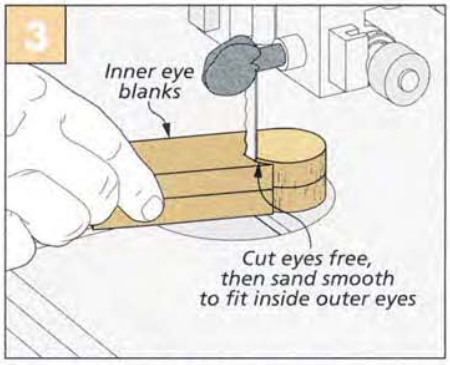

Inner Eyes. Cut the inner eyes using the band saw, as well. Check the fit in the outer eyes as you go.

HOBBYMAGAZINES.ORG

to drill a centered hole in the blank. I then moved the blank a bit and drilled another hole, slightly overlapping the first. Clean up with a small file to form an oblong opening. Then head back to the drill press and use the sanding drum again to dish out the jaw slightly.

Figure 2 shows how you can use a small-diameter drill bit to drill a hole for the wire that attaches the jaw to the mouth. Then drill a second hole through the oblong hole you drilled earlier.

Details 'c' and 'd' on the opposite page illustrate how to fit the wire into the hole in the jaw and bend it to make a hinge. Drill holes in the fish body to attach the hinged mouth. As for the front hole, you'll leave it alone for now. Later on, it accepts a pin to connect the jaw to a linkage system that makes it move.

BEARING POSTS. The main drawing on the opposite page shows how the two-part bearing posts are mortised into the body to trap a pair of bearings. The bearings hold the drive shaft. The bearing posts are drilled to house the bearings and the post covers are glued to the posts to hold the bearings in place.

Figures 3 and 4 walk you through the process of drilling holes for the bearings. After that, just cut them to shape at the band saw and sand them smooth. You can test the fit in the matching mortises on the body, but don't install them yet.

PROPELLER. The propeller harnesses the wind power, and the design for this propeller is pretty simple. But it catches plenty of wind for the job. It starts with a hub to hold the blades.

The hub is simply a square block with a centered hole for the drive shaft and four angled slots for the four blades. After cutting the hub blank, drill the centered hole before cutting the slots.

In Figure 5 you'll see the two key factors in cutting matching slots for the blades: an auxiliary fence on the miter gauge set to 24°, and a stop block to hold the blank in position. All you need to do then is set the blade height as shown in Figure 5a and make the four cuts in the blank.

To make the blades, just tape four blanks together and cut them to shape at the band saw (Figure 6). Before removing the tape, sand the edges smooth with sandpaper on a flat surface. Now, install the blades in the hub with glue.

How-To: DRILL, SHAPE & CUT THE PARTS

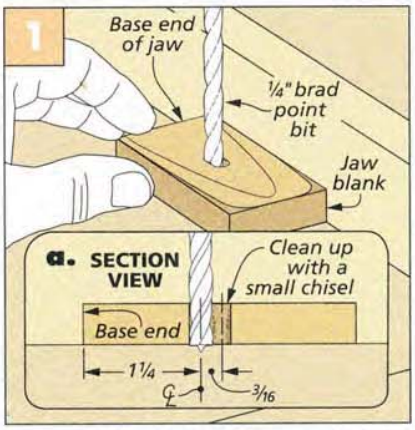

Tongue Blank. The oblong hole in the jaw starts as two side-by-side holes. A chisel removes the waste.

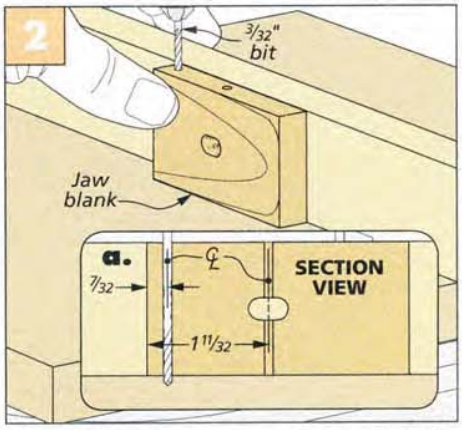

Side Hole in Jaw. A pair of through holes in the jaw will hold the wire jaw hinge and the pin for the mouth linkage.

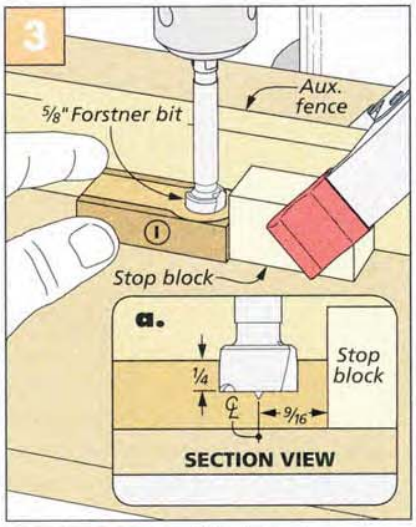

Bearing Post. Drill a hole that matches the outside diameter of the bearing, in this case, 5/8".

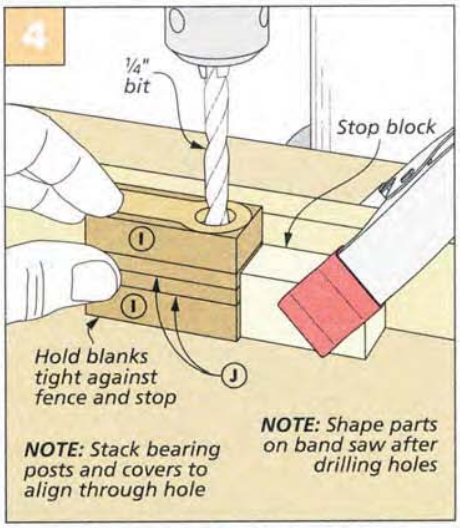

Through Hole for Shaft. Next, drill a through hole that matches the diameter of the steel shaft (1/4").

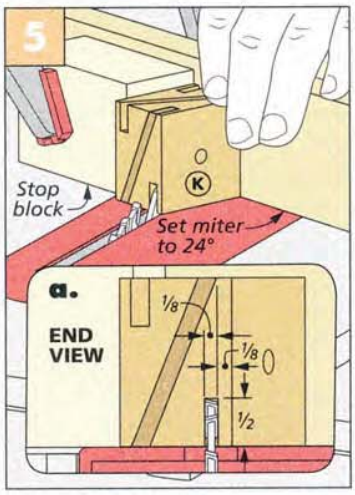

Propeller Hub. Use an auxiliary miter gauge fence set to 24° to cut the grooves for the blades.

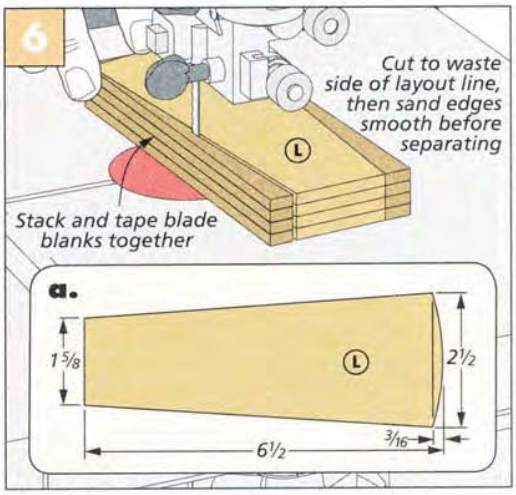

Propeller Blades. Tape the blade blanks together and cut them to shape at the band saw. Then sand them smooth.

HOBBYMAGAZINES.ORG

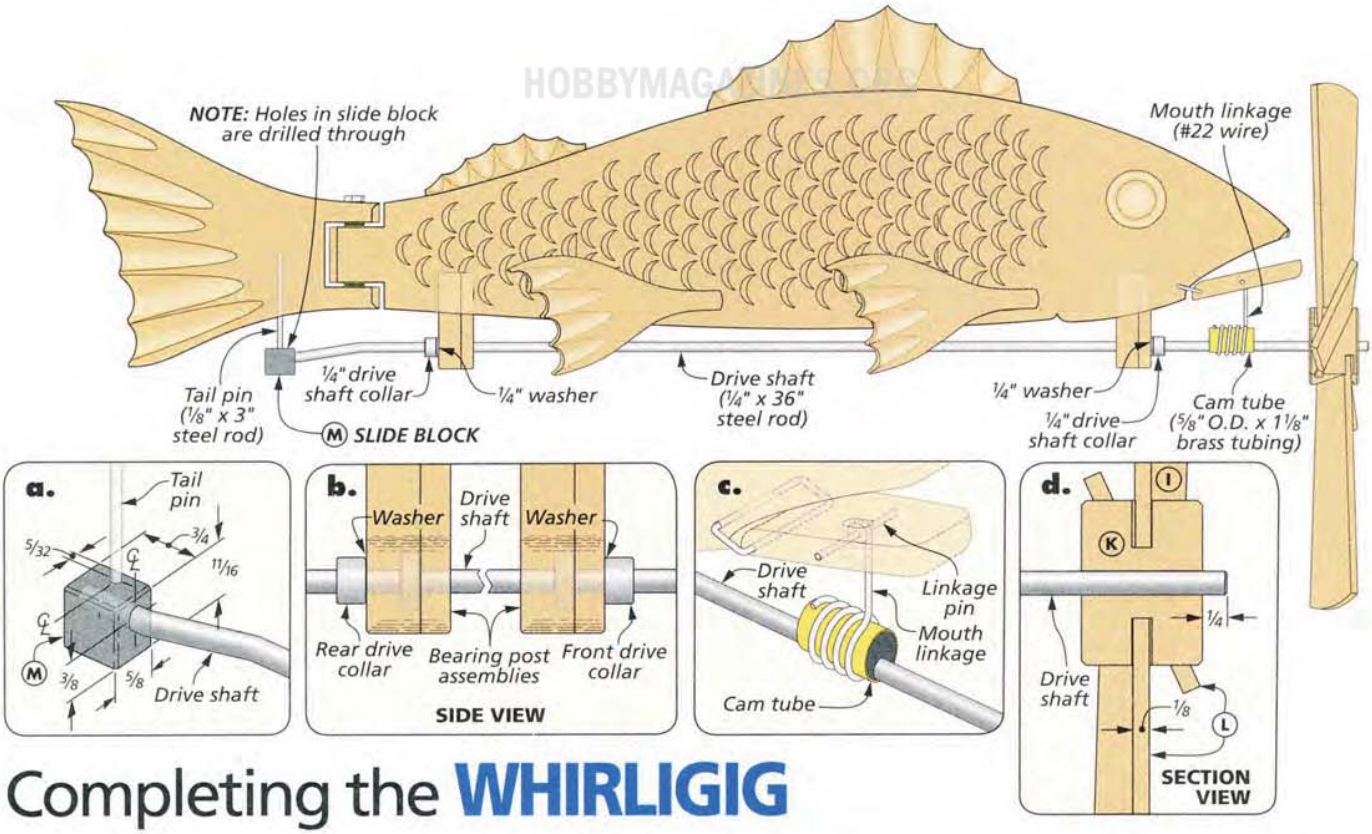

Completing the **WHIRLIGIG**

Your final task is to bring the fish to life. Don't worry, there's nothing supernatural needed. It's just a simple drive train. The propeller turns a steel shaft with an off-center, epoxy-filled brass tube. The rotation provides cam-action at the front to move the lower jaw and a slide block at the back to animate the tail.

DRIVE SHAFT. The first thing to do is make the drive shaft. Don't cut it to final length just yet. You'll want to make sure everything fits into place first. Instead, cut a couple of short pieces off the end and slip them and the rod into a machinist's vise. The left drawing below shows you how to space everything. Then close the jaws tightly to bend the rod as shown in detail 'a.'

TAIL SLIDE BLOCK. A tail slide block connects the shaft to the tail. It's just a small block drilled to fit the drive shaft and the tail pin (detail 'a,' above).

CAM TUBE. The next thing to do is to cut a small piece of brass tubing. This acts as a cam on the front of the drive shaft. I roughed up the inside of the tube with sandpaper to grip the epoxy that attaches it to the shaft later.

LINKAGE. The middle drawing below demonstrates the technique for forming the wire linkage. I wrapped the wire around a dowel of the same diameter as the cam tube. Then, I wrapped the end around a 1/8" rod to form the tight loop.

ASSEMBLY. To put everything together, start by placing one of the shaft collars on the rod and threading it through the rear bearing post. Continue through the front bearing post and then add the second shaft collar. Now insert a short piece of 1/8" steel rod into the tail and connect the slide block to the rod.

How-To: MAKE THE SHAFT, LINKAGE & CAM TUBE

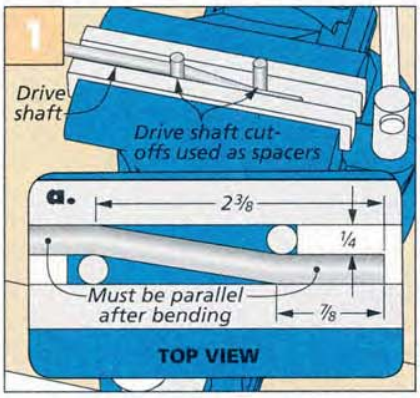

Bending Drive Shaft. Make sure the offset portion of the rod remains parallel to the main shaft.

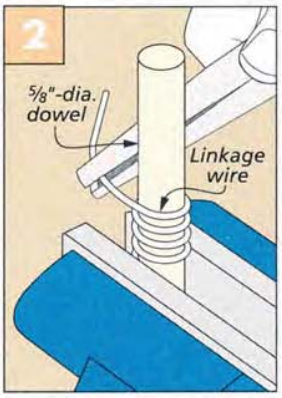

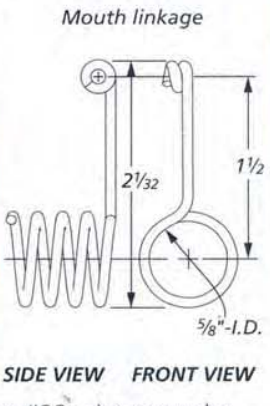

Mouth Linkage. Wrap the #22 wire around a piece of dowel a few times. Then twist the top around the 1/8" rod to form an eye hole.

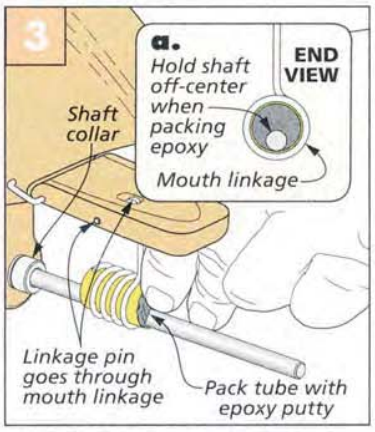

Attach the Cam. A little epoxy putty will affix the cam tube to the drive shaft.

HOBBYMAGAZINES.ORG

HOBBYMAGAZINES.ORG

▲ Whenever painting over unsealed wood, a couple coats of primer are an absolute must. They not only seal the pores in the wood, but they make the colors really pop.

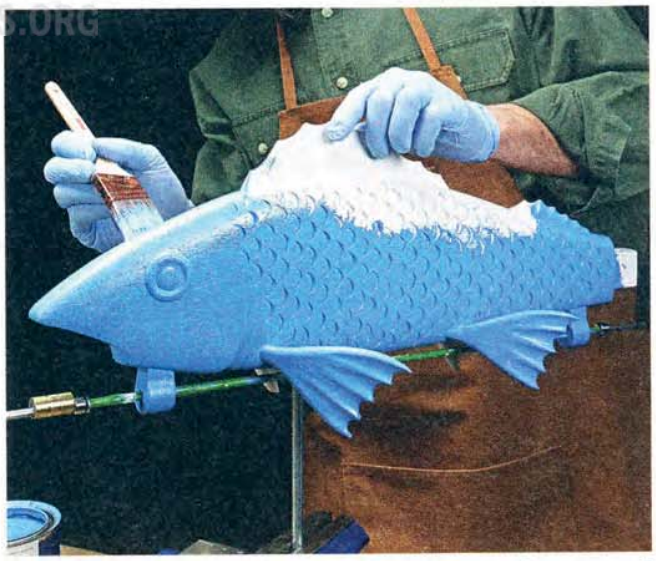

▲ Once the primer dries, brush on a couple coats of paint. Make sure paint gets into all the nooks and crannies and covers the entire body.

Next, slip the cam tube on and position it under the lower jaw. Fit the mouth linkage and secure it in place by sliding the linkage pin into the loop of the mouth linkage (detail 'c,' opposite page). At this point, you can fill the tube with epoxy putty. Mold the putty to completely fill the tube and hold the drive shaft as shown in detail 'a' in the right drawing at the bottom of the opposite page.

Once you have the drive shaft in position, install the bearing posts in their mortises with glue. Then you can tighten the set screws on the shaft collars.

All that remains now is to cut the shaft to final length with a hack saw and install the propeller with a dab of polyurethane glue. Mount the whirligig on a 3/8" rod using the hole you drilled earlier.

THE PAINT JOB. As I said earlier, this is a fictional creature. So you can paint it any color you like. The photos on this page give you an idea of the process I used. No matter what colors you decide on, you should stick to the sequence shown here. (My paint choices are detailed in Sources on page 51.)

As you can see in the photos, I masked the drive shaft to keep paint away from the bearings and the rod. Then I put on two coats of primer. Don't skimp on the primer, as it's the key to a good finish. After adding the other colors, I glazed the fish to give it a more "fish-like" appearance — that is, I wanted it to look a little slimey. The main photo on the first page of this article shows the final result. W

▲ I highlighted the tips of the fins with yellow and red. I also painted the eyes yellow and black.

▲ After painting, I glazed the fish by adding some black, blue, and red to a water-based polyurethane.

Materials, Supplies & Cutting Diagram

A Body (1)	1 3/4 x 6 1/4 - 24 1/4
B Large Dorsal Fin (1)	3/8 x 3 1/8 - 8
C Small Dorsal Fin (1)	3/8 x 1 1/8 - 4 1/4
D Ventral Fins (4)	1/2 x 3 1/8 - 5 3/4
E Tail Fin (1)	1 x 6 7/8 - 8 1/4
F Outer Eye (2)	3/8 x 1 1/2-dia.
G Inner Eye (2)	5/16 x 1-dia.
H Jaw (1)	7/16 x 1 1/2 - 2 7/8
I Bearing Posts (2)	9/16 x 1 1/8 - 2 1/2
J Bearing Post Covers (2)	5/16 x 1 1/8 - 2 1/2
K Propeller Hub (1)	1 1/4 x 1 3/4 - 1 3/4
L Propeller Blades (4)	1/8 x 2 1/2 - 6 1/2
M Slide Block (1)	5/8 x 3/4 - 11/16

- (1) 1/4"- 20 x 4" Hex Head Bolt
- (2) 1/4" I.D. Ball Bearings
- (2) 1/4" Shaft Collars
- (2) 1/4" SAE Washers
- (1) 1/4" 36" Low-Carbon Steel Rod
- (1) 3/8" 18" Steel Rod
- (4) 1/4" I.D. Brass Flanged Bushings
- (1) 2' #22 Galvanized Wire
- (1) 5/8" O.D. x 1 1/8" Brass Tubing
- (1) 1/8" x 3" Steel Rod

***NOTE:** All wood parts made from a 1 3/4" x 10" - 36" basswood blank*

HOBBYMAGAZINES.ORG

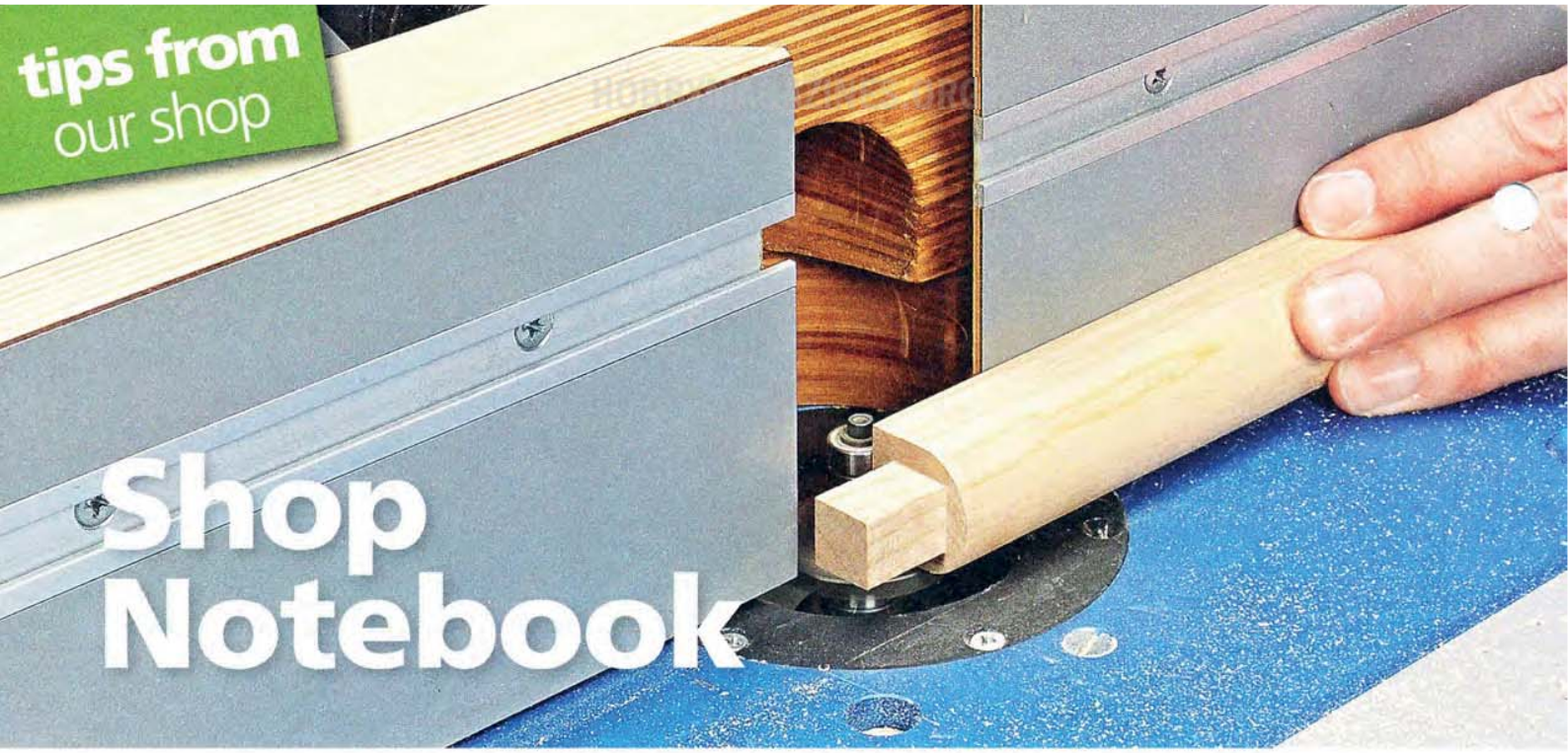

Routing the Towel Bars

The towel rack on page 16 has five round towel bars connecting the end assemblies. Each towel bar has tenons on both ends. Since it would be difficult to form the tenons on a dowel, I opted to start with square blanks, cut the tenons to size (Figure 1), and then round over all of the edges at the router table.

SET UP THE CUT. Since the towel bar blanks are 1" square, a ½" roundover bit in the router table works perfectly to create the round bars. The key to success is setting the height of the bit so the bottom edge of the radius is flush with the surface of the table. The bearing should be flush with the face of the router table fence (Figure 2a). Use a test piece to make sure there are no ridges (bit too high). Or conversely, that it's not cutting an incomplete radius (bit too low).

ROUND OVER THE TOWEL BARS. Simply run one edge over the bit, rotate to the next side and make another pass until all four sides are done (Figures 3 and 3a).

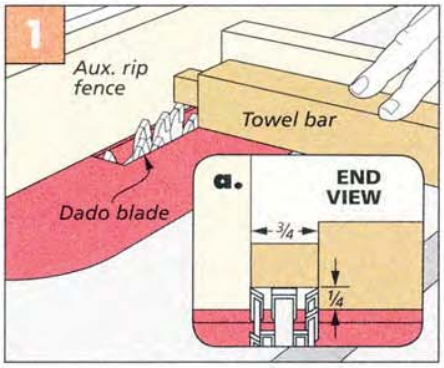

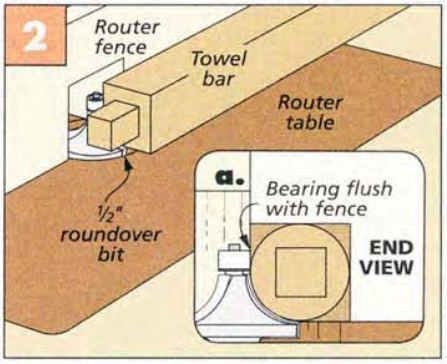

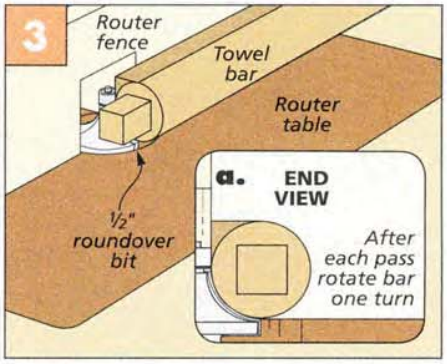

Arch Assembly Jig

The segmented arches for the towel rack on page 16 are a little tricky to glue together on their own. So I built this simple assembly jig to aid in the process.

GLUE UP THE ARCHES. To set up the jig, attach the cleat and one bracket to the base. Lay the three arch segments in place on the jig. The second bracket can then be set in position. Make sure the arch segments are aligned properly and then screw the second bracket to the jig base. Now it's just a matter of adding the splines and some glue to the slots and clamping the arch assembly to the jig.

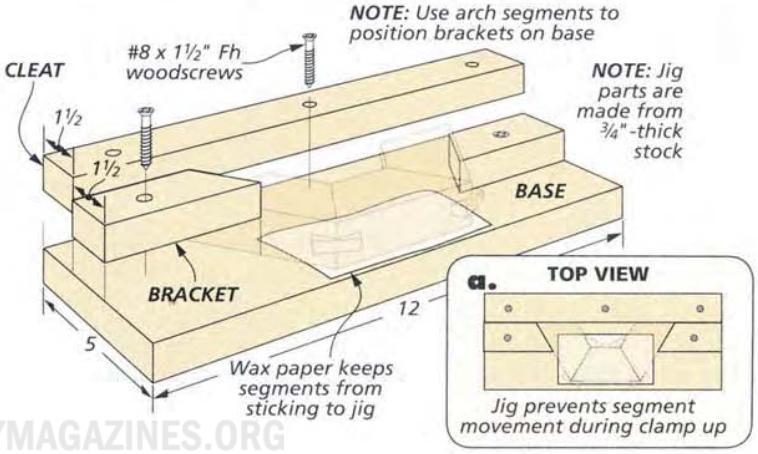

HOBBYMAGAZINES.ORG

HOBBYMAGAZINES.ORG

Column Molding Profile

The fireplace surround (page 34) features mitered molding that forms a transition between the plinth blocks at the bottom and columns above. The molding has a gently rounded profile on the edge, but it's easy to make using a three-step process on the router table.

ROUNDOVERS. The first two cuts are accomplished with the same router bit. First, set the height of a 3/8" roundover bit in the router table so that the squared-off shoulders of the cutters are exposed 1/4" (Figure 1). Then make a pass along one edge of the molding blank. Next, lower the bit so it's only cutting the roundover profile, and rout the opposite face of the molding (Figure 2).

CORE BOX BIT. The last step involves removing the "stepped" portion of the profile in order to complete the look of the column molding. That process is easy to accomplish by using a core box bit, as shown in Figure 3 below. Once the final routing pass is complete, the molding is ready to be cut into mitered pieces and installed on the column above it, as explained on page 37.

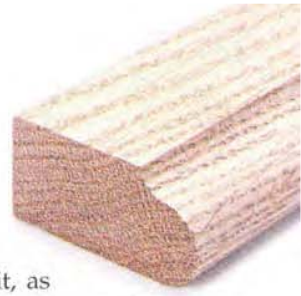

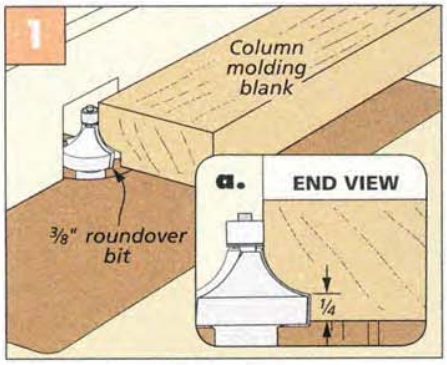

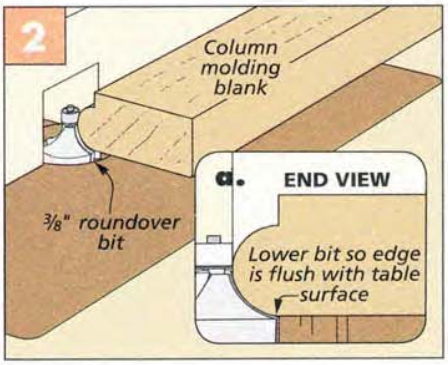

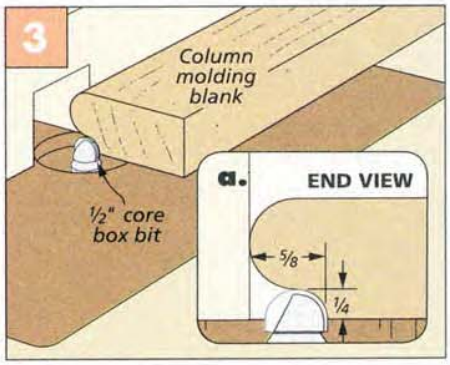

Mitering Crown Molding

I simplified the construction of the fireplace surround by using purchased crown molding. The molding is easy to cut to fit using a miter saw, as explained on page 39.

TABLE SAW MITERS. If you don't own a miter saw, it's still possible to miter this crown molding cleanly using a two-step process with a table saw and hand saw, as shown at right. The molding stands taller than you can raise the table saw blade, but it's easy to complete the miter with a hand saw cut.

MITER SLED. The simplest way to miter crown molding is to cut it at its mounted angle. This way, you can just set the miter gauge to 45° and make the cut. In order to hold the molding securely at this angle, I built the sled you see at right. It's attached to the miter gauge with screws.

COMPLETE THE CUT. As you can see in Figure 1, a pass through the table saw blade cuts almost completely through the molding, but not quite. Luckily, completing the cut is simple. Just lay the molding flat on a benchtop, and use the table saw blade kerf as a guide for a hand saw as you complete the cut (Figure 2). After a little sanding, the molding is ready to be installed.

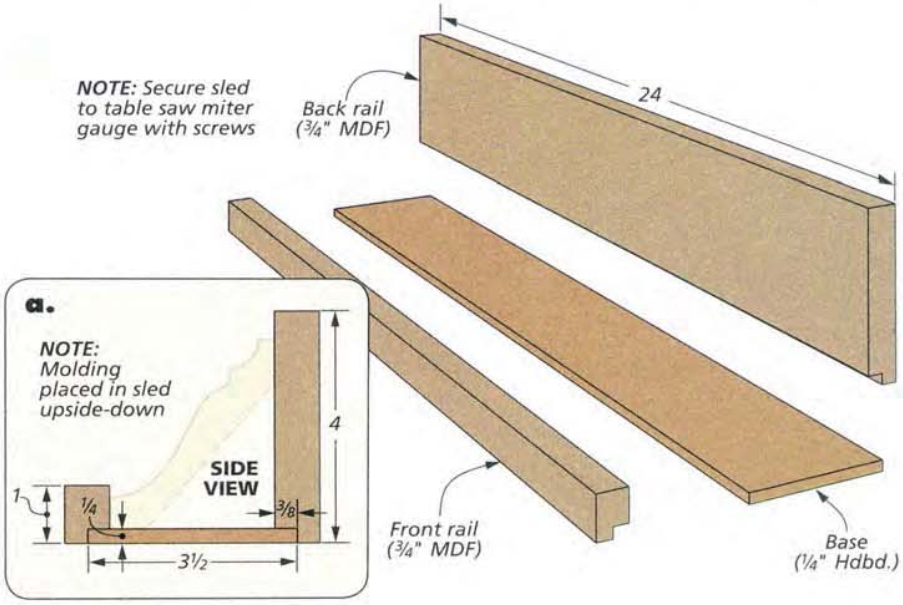

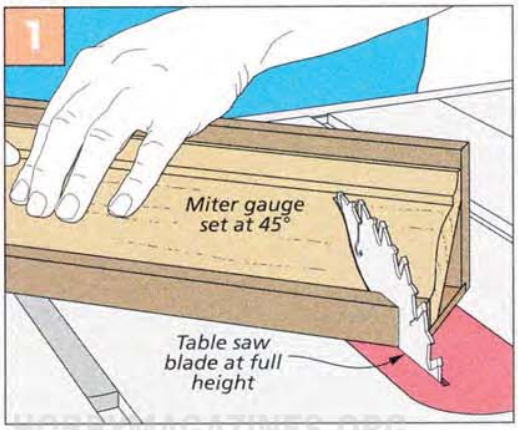

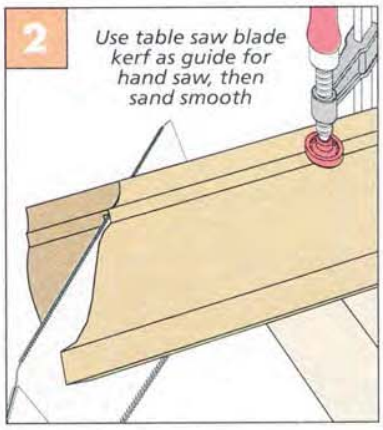

HOBBYMAGAZINES.ORG

Heirloom Project

traditional Fireplace Surround

Make your wood or gas fireplace an even more welcoming presence by adding this elegant frame and panel fireplace surround.

Everyone enjoys a warm fire in the winter. But the rest of the year, the fireplace tends to get ignored. That can all change by adding the eye-catching fireplace surround you see above.

Though it looks elaborate, the surround is simpler to build than it appears. The columns and header around the tile are boxes with plywood backers that are screwed to the wall. The raised panels are added later, secured by molding strips that are nailed in place. Even the mantel is easy. The crown molding was purchased from a home center, and I'll show you a table saw technique for making the dentil molding.

FIT YOUR FIREPLACE. Whether you're starting from scratch or replacing an existing surround, it's easy to modify the dimensions to fit your fireplace. The key is to have the tilework for the hearth and the surround installed first. Then you can measure and adjust the height of the columns and the width of the top portion to fit around the tile.

The drawings on the right give you a "big picture" overview of the basics of the project. Then turn the page to get started on your own great-looking fireplace surround.

HOBBYMAGAZINES.ORG

Construction Overview / OVERALL DIMENSIONS: 73"W x 54¾"H x 7"D

HOBBYMAGAZINES.ORG

Crown molding mitered to wrap around a built-up assembly

Mantel is a solid-wood piece with a routed bullnose profile

Dentil molding is easy to make on the table saw (page 38)

Header spans the gap between the two columns

Raised panels and molding added after assemblies are installed on the wall

Shop-made molding forms transition between plinth block and column

Vertical column assemblies are identical

Plywood backers in columns attach to wall and accept raised panels and molding

Plinth blocks form base of surround

▲ Walnut veneer accents add a pop of color to the upper column panels. Learn how to add them on page 40.

SIZING YOUR SURROUND

Crown assembly is a few inches longer than dentil assembly

Header assembly is the same length as run of tiles above fireplace. Adjust length of center panel to fit your fireplace

Mantel extends over crown assembly

Column divider rail aligns flush with top row of tiles. Modify lower panel for your fireplace

Dentil assembly extends slightly beyond header and columns right below it

Install hearth and tile around fireplace before sizing and building surround

Hearth tiles surrounded by beveled wood molding strips

Plinth block and molding scribed and cut to fit over tile on the inside

HOBBYMAGAZINES.ORG

Start with the COLUMNS & HEADER

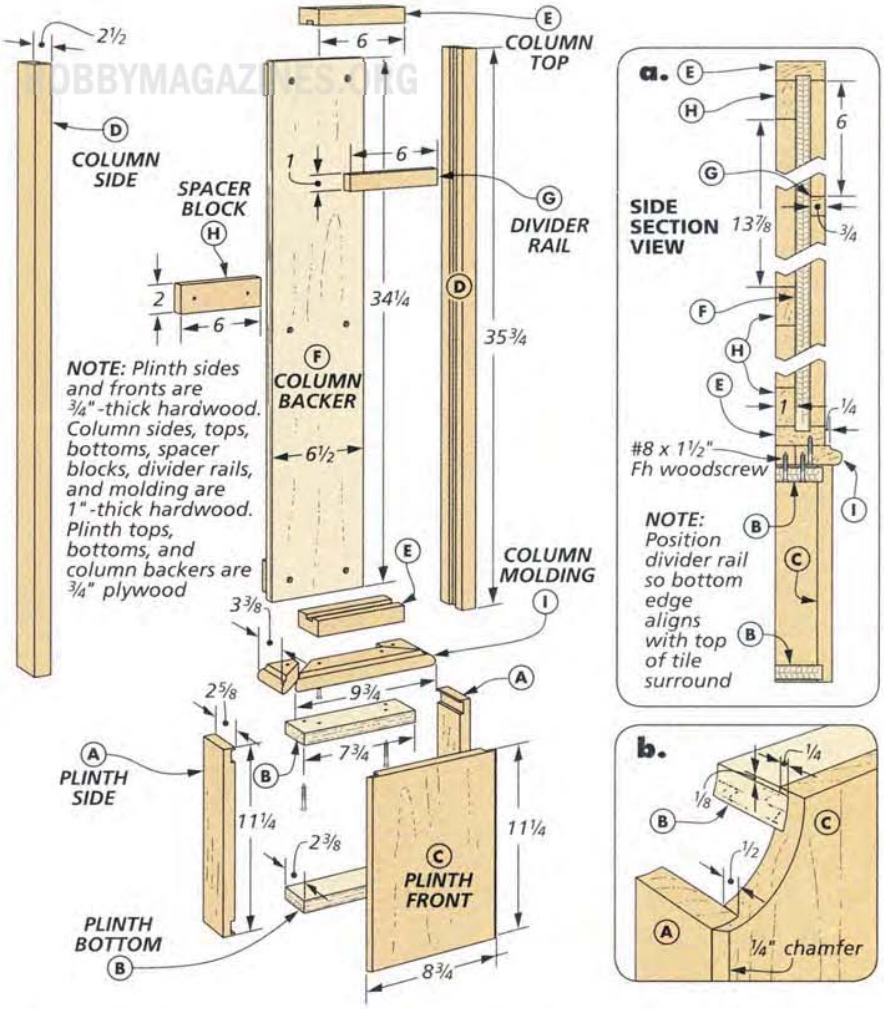

The best place to get going on this fireplace surround is with the vertical assemblies on either side of the fireplace. Each one has a plinth block assembly topped by a column.

PLINTH BLOCKS. A plinth block is simply the term for the base of a column or pedestal. You can start by cutting the sides and front from hardwood, and the tops and bottoms from plywood.

The plinth block is really just a frame with a front attached. I chose dadoes to join the sides and front to the tops and bottoms. This way, it's easy to remove a bit of material from the bottom to make them sit flat on the floor if needed. See the left drawing below.

The joint between the sides and the front is just a basic rabbet. Detail 'b' at right provides the details. You'll note that there's also a slight chamfer on the edges of the front. Before assembling the plinth blocks, drill holes in the tops. Later on, these are used to join the plinth blocks to the columns with screws. Then glue and clamp them together.

COLUMN ASSEMBLY. The columns on either side of the fireplace resemble frame and panel assemblies. But they're simple boxes with raised panels secured to the front by nailed-in molding strips. You'll build and install the boxes first and then add the panels later.

Start by cutting the column sides, tops, bottoms, and plywood backers to size. Next, cut a groove in the top, bottom, and sides to fit the backer (middle drawings below). Glue up each column with the backer in place.

There are four more blocks added to each column. The first is a divider rail that separates the raised panels. And three spacer blocks on the back accept screws for attaching the columns to

How-To: CUT THE JOINERY

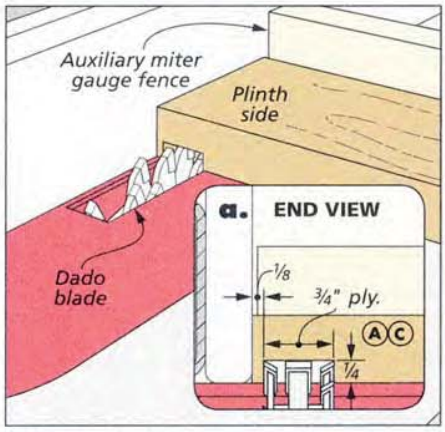

Dadoes. The plinth block sides and front receive matching dadoes in order to accept the top and bottom pieces.

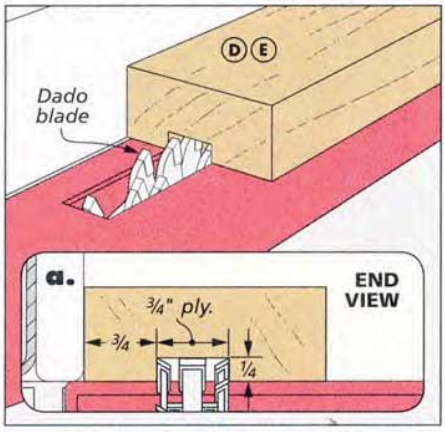

Groove. Cut a matching groove in the column sides, tops, and bottoms. This accepts the plywood backer panel.

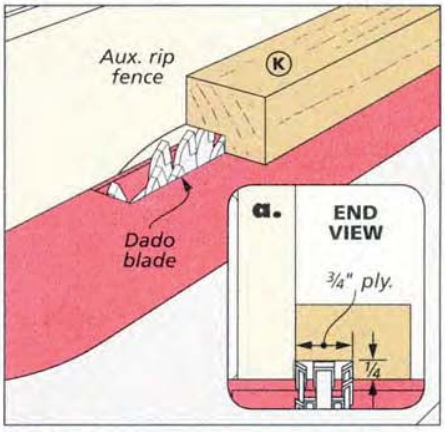

Rabbet. The header top and bottom pieces receive rabbets that allow them to wrap around the header backer panel.

HOBBYMAGAZINES.ORG

the wall. All four blocks get positioned and glued in place as shown in detail 'a' on the opposite page.

COLUMN MOLDING. An elaborate-looking column molding forms the transition between the columns and the plinth blocks. This molding is formed with a three-step router table technique that's outlined in Shop Notebook on page 33. You'll attach it to the column later.

HEADER. After building the columns, the header that connects them should look familiar. But it's shallower than the columns, so it's built a little bit differently.

Once again, you can cut the top and bottom from hardwood, and the backer from plywood. But this time, cut rabbets in the top and bottom to wrap around the edges of the backer (detail 'a'). After gluing this assembly together, you can size the dividers to fit in between and glue them on, as well.

ASSEMBLY & INSTALLATION. With these basic assemblies complete, now's a good time to apply stain and finish to the individual assemblies (page 51). Once the finish dries, you'll want to screw everything together before attaching it to the wall. The box below gives you a good overview of the process. It starts with mitering the column molding to fit underneath the column, and then screwing it in place (Figure 1). Next, join the plinth blocks to the column molding with screws (Figure 2).

Finally, you can place the entire U-shaped assembly of the columns and header facedown on a benchtop, and drive screws through the column sides into the header sides to connect them (Figure 3). It's a good idea to have a helper assist you in moving the assembly to the wall. You might need to scribe and cut the plinth block and molding with a hand saw where it overlaps the tile. Then secure it with long woodscrews driven into wall studs, as shown in Figure 4. You can use wall anchors for a few of the screws if necessary, as long as most hit studs.

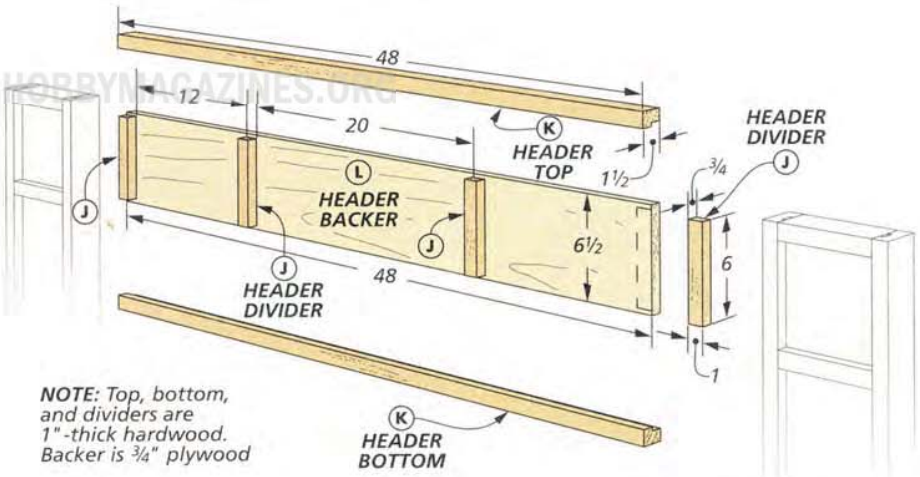

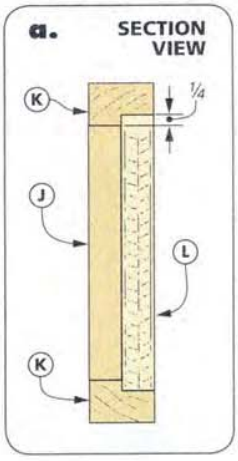

How-To: ATTACH IT TO THE WALL

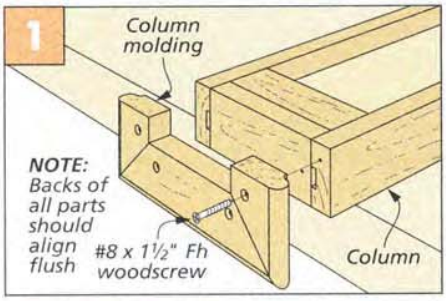

Molding to Column. Miter the column molding to fit and then fasten it to the bottom of the column.

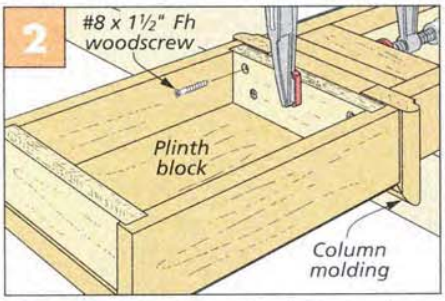

Plinth to Column. Next, clamp on the plinth block, and drive screws up through the top into the column molding.

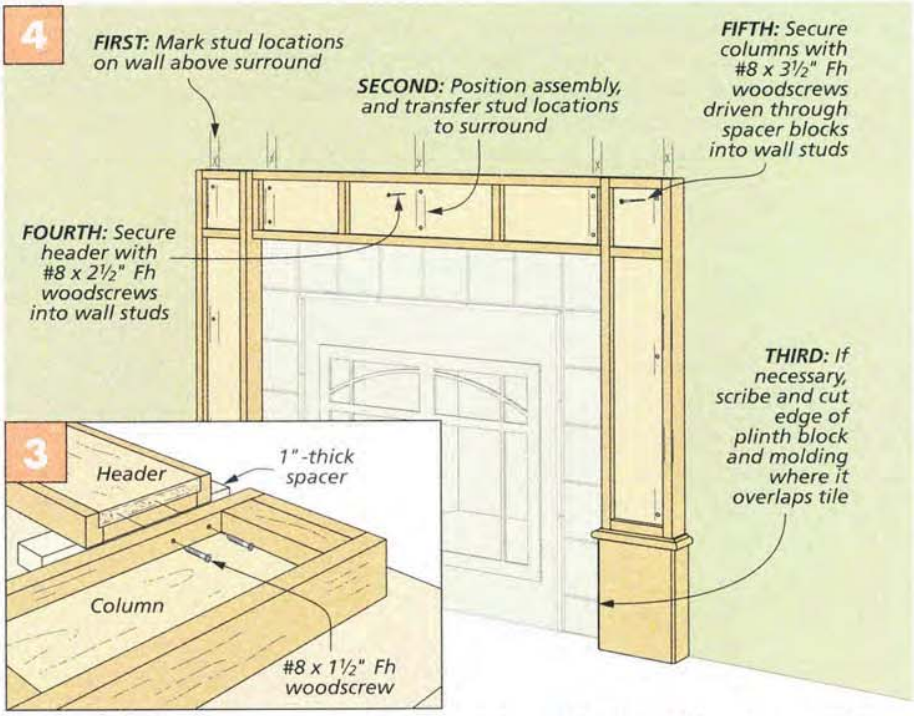

Header to Columns. Create a large U-shaped assembly by driving screws through the column sides into the header.

Attach to Wall. Move the assembly into place on the wall. Mark the stud locations, then secure it with long screws.

HOBBYMAGAZINES.ORG

Adding the DENTIL & CROWN ASSEMBLIES

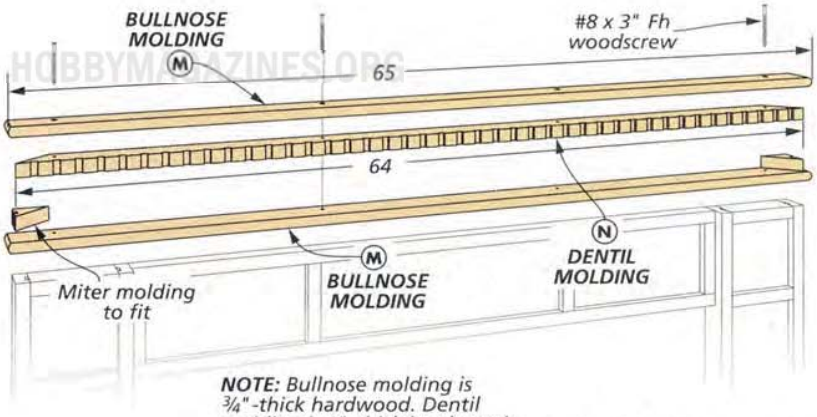

NOTE: Bullnose molding is ¾"-thick hardwood. Dentil molding is 1"-thick hardwood

NOTE: Glue bullnose molding to dentil molding first. Then mount to header and columns with screws

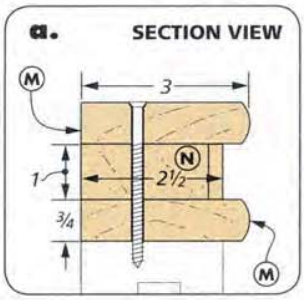

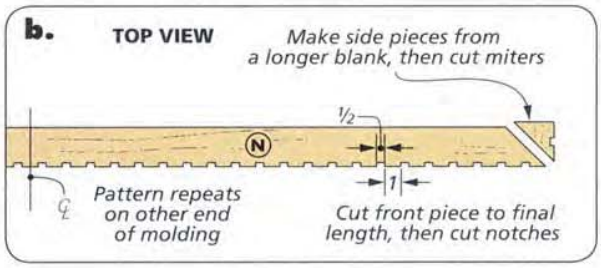

The framework of the fireplace surround is now established with the columns and header attached to the wall. The next steps involve building up some of the decorative details above the header and the columns. That starts with a dentil molding and a crown molding assembly.

DENTIL MOLDING ASSEMBLY. As you can see in the drawings at right, the dentil assembly consists of a piece of shop-made dentil molding that's sandwiched between two pieces of bullnose molding. You can get started on the easier bullnose molding pieces first.

After cutting them to size, you'll rout a bullnose profile on the ends and front edge of each of these pieces. To make this profile, equip the router table with a ½" roundover bit. Set the bit at the height shown in the lower left drawing, then rout both faces of the board to create the profile.

DENTIL MOLDING. The dentil molding looks elaborate, but it's really not that difficult to make. Detail 'b' above and the middle drawing below explain how to cut it on the table saw.

As you can see, the notches are made with a ½" dado blade, and they're spaced 1" apart. The secret is to lay out this pattern carefully across the entire front of the molding piece. Equip the table saw's miter gauge with a wood auxiliary fence to back up the cut, and then set the rip fence as a stop to position the first cut.

After completing the first cut, you can carefully reset the rip fence 1½" further from the blade for the next cut. Then repeat this sequence to cut all of the notches along the entire front piece of dentil molding.

You'll want to make an extra piece of dentil molding. This provides the stock needed to form the mitered blocks on the ends (lower right drawing). Once the miters are cut on the three dentil molding pieces, you can glue and clamp them between the bullnose molding pieces. When the glue dries, stain and finish them, and then secure the whole assembly to the header with woodscrews.

CROWN ASSEMBLY. Above this dentil molding assembly sits elegant crown

How-To: DENTIL DETAILS

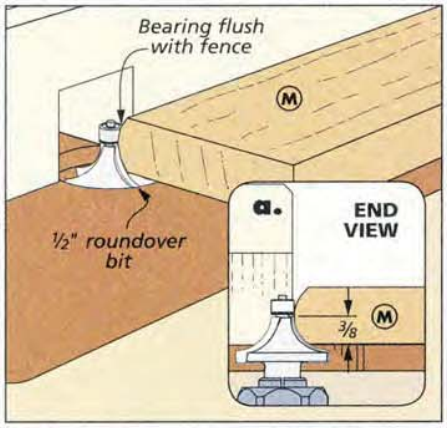

Bullnose. Lower a roundover bit to center the bearing bottom on the piece. Rout both faces to make the profile.

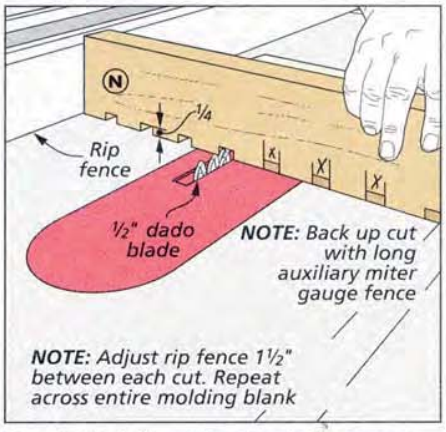

Dentil Molding. Use the rip fence as a stop and notch the molding with a dado blade. Repeat the process for each notch.

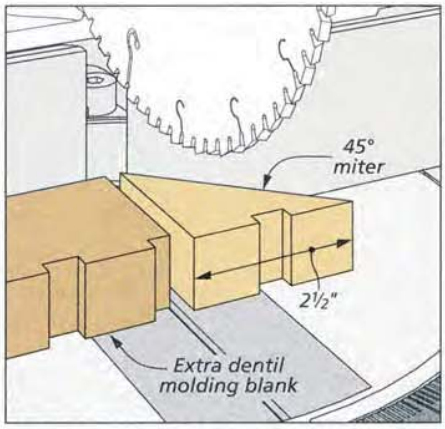

Miter. Notch an extra molding blank, and miter small blocks from it to use as "returns" to the wall on the ends.

HOBBYMAGAZINES.ORG

molding that's also mitered at the corners to "return" to the wall. I simplified the construction by purchasing the oak crown molding from a home center (refer to Sources on page 51). But the molding still requires an assembly to mount to. This crown assembly is made up of top and bottom pieces and a series of spacer blocks cut from hardwood.

The top piece needs to be beveled on the ends and front edge to match the "spring" angle of the molding (see details 'a' and 'b'). This is easy to accomplish by tilting the table saw blade to 40° before making the cuts. The bottom piece and the spacers can simply be cut to size.

Before assembling these parts, it's best to drill all the countersunk holes in the top and bottom for attaching them to the spacer blocks. Also, drill a series of larger access holes in the crown assembly top. You can see the dimensions and locations of these holes in the details on the right. You'll reach through these access holes with a long bit or a screwdriver in order to attach the crown assembly to the dentil molding assembly. Once they're drilled, you can screw the crown assembly together.

MITER & ATTACH MOLDING. The next step is attaching the crown molding. This just requires careful measuring and mitering to make the molding wrap around the assembly.

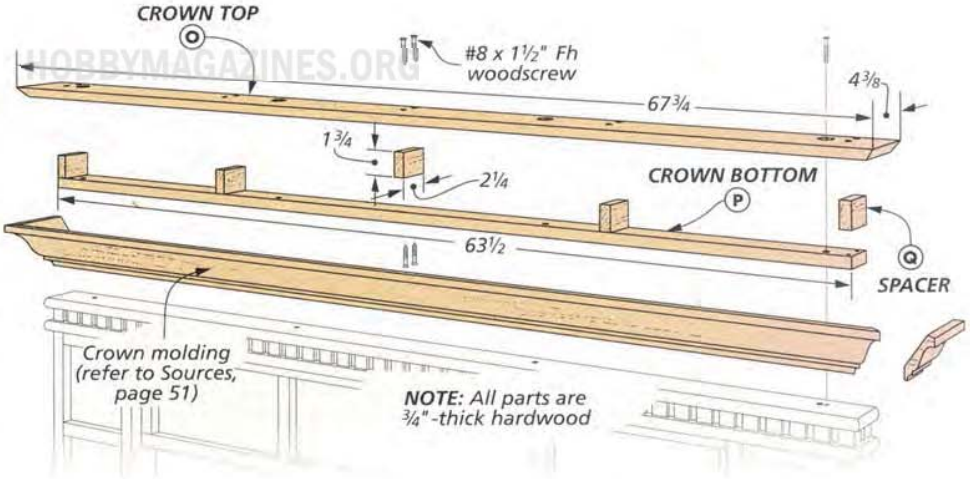

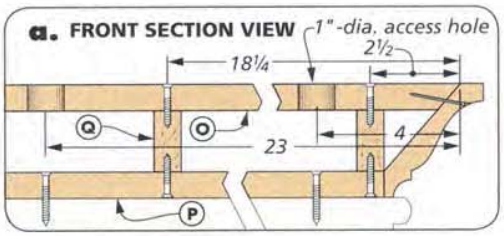

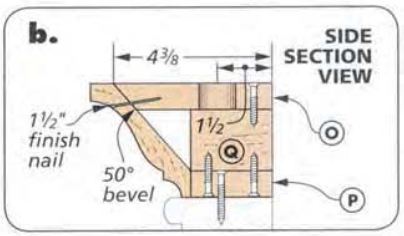

The easiest way to miter the crown molding is with it positioned upside-down at its mounted angle. The drawings below left show how to make this cut with a miter saw. If you don't own a miter saw, you can also accomplish the task using a combination of a table saw and a hand saw. I'll show you the process in Shop Notebook on page 33. Once the molding meets cleanly at the corners with no gaps, you can secure it to the crown assembly top and bottom with finish nails. Then apply stain and finish to the assembly.

CONNECT THE CROWN ASSEMBLY. The crown assembly is secured to the dentil molding assembly with woodscrews. Center it from side to side, and use a few clamps to hold it in place. Then reach into the access holes to mark through each pilot hole with an awl. Now remove the crown assembly and drill pilot holes down into the dentil assembly. Put the crown assembly back in place and drive in the screws using a screwdriver or a long drill driver bit to complete the job, as shown in the lower right drawing.

How-To: CROWNING ACHIEVEMENT

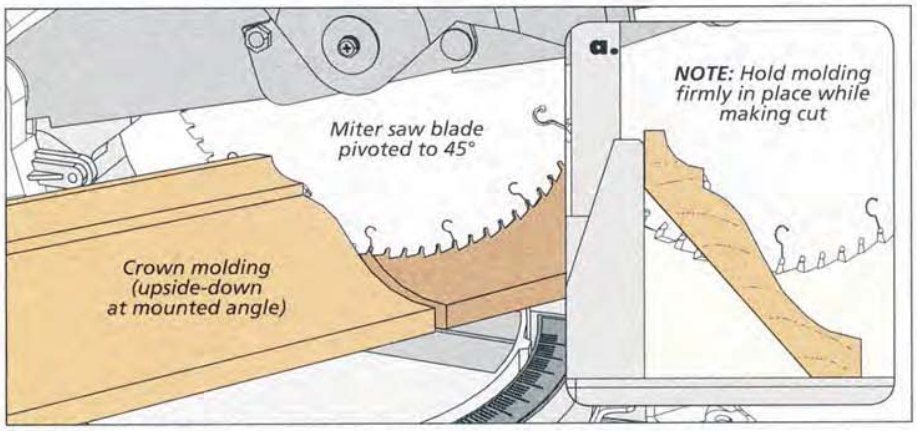

Miter Crown Molding. The easiest way to miter the crown molding to wrap around the assembly is at the miter saw. Place the molding upside-down at its mounted angle with the saw pivoted to 45°. Then make the cut.

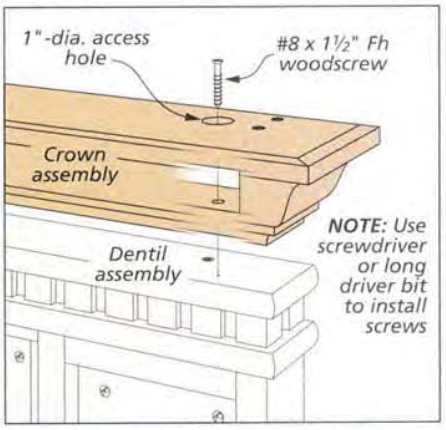

Screw in Place. Use the access holes to secure the crown assembly with screws driven into the dentil molding.

HOBBYMAGAZINES.ORG

Finish with the **RAISED PANELS & MANTEL**

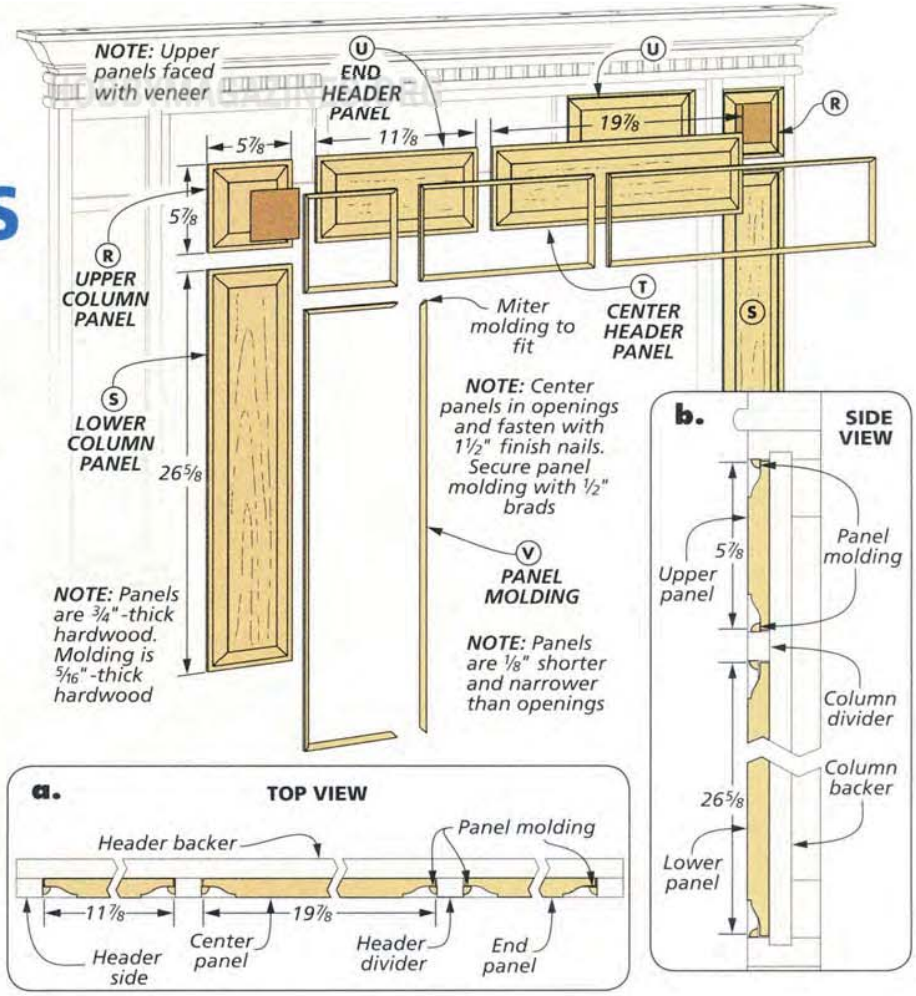

By now, the fireplace surround should really be starting to take shape. All that's left at this point is to dress it up with some of the finishing touches. Those include the raised panels, the molding strips that secure them, and the solid-wood mantel that goes on top of the surround.

ROUTED RAISED PANELS. The first step in making the raised panels is to cut them all to size. Note that each panel is ⅛" shorter and narrower than the space it fits in to account for seasonal wood movement. Also, the two upper column panels have decorative veneer applied to their faces. So you can glue and roll that veneer on now, as shown in the lower left drawing.

The curved, raised profiles on the ends and edges of the panels are formed using a panel-raising bit in the router table. Using a bit this size can seem intimidating if you've never done it before. But it's actually fairly straightforward.

The key is to use a heavy-duty router (at least 2½ hp) to power the bit, and run the router at a low speed (12,000 RPM). You'll also need a router table insert plate and fence with large openings to accommodate the bit diameter. To create the profiles, you won't cut them all at once. Instead, you'll make a series of passes, gradually increasing the depth of cut with each pass (lower middle drawing). The end result will be a smooth, crisp profile on the ends and edges of each of the raised panels.

PANEL MOLDING. The raised panels are secured in the openings with thin strips of panel molding. These pieces are "quarter-round."

The strips are too narrow to rout on their own, so start with a wider blank, as shown in the lower right drawing. This way, you can rout the profile on

How-To: MAKE PANELS & MOLDING

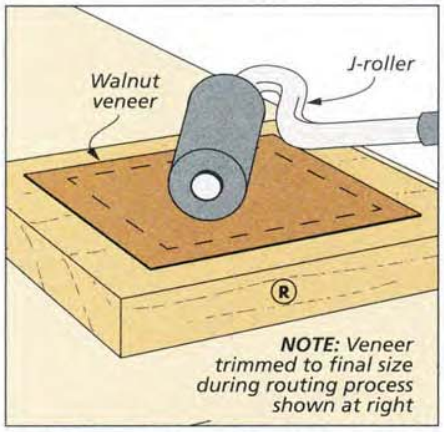

Add Veneer. Apply the walnut veneer to the upper panels using a thin layer of glue and a J-roller.

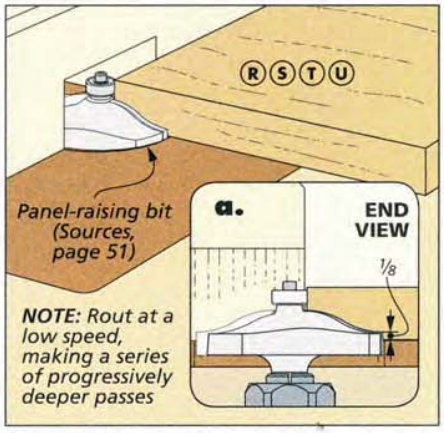

Rout Profile. Create raised panels at the router table. It's best to shape the profile using a series of deeper passes.

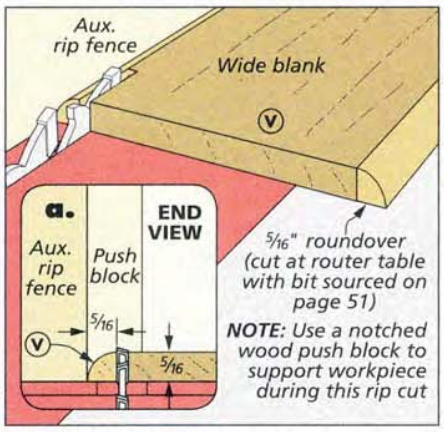

Panel Molding. To make the panel molding, rip strips free at the table saw after rounding the edges of a wide blank.

HOBBYMAGAZINES.ORG

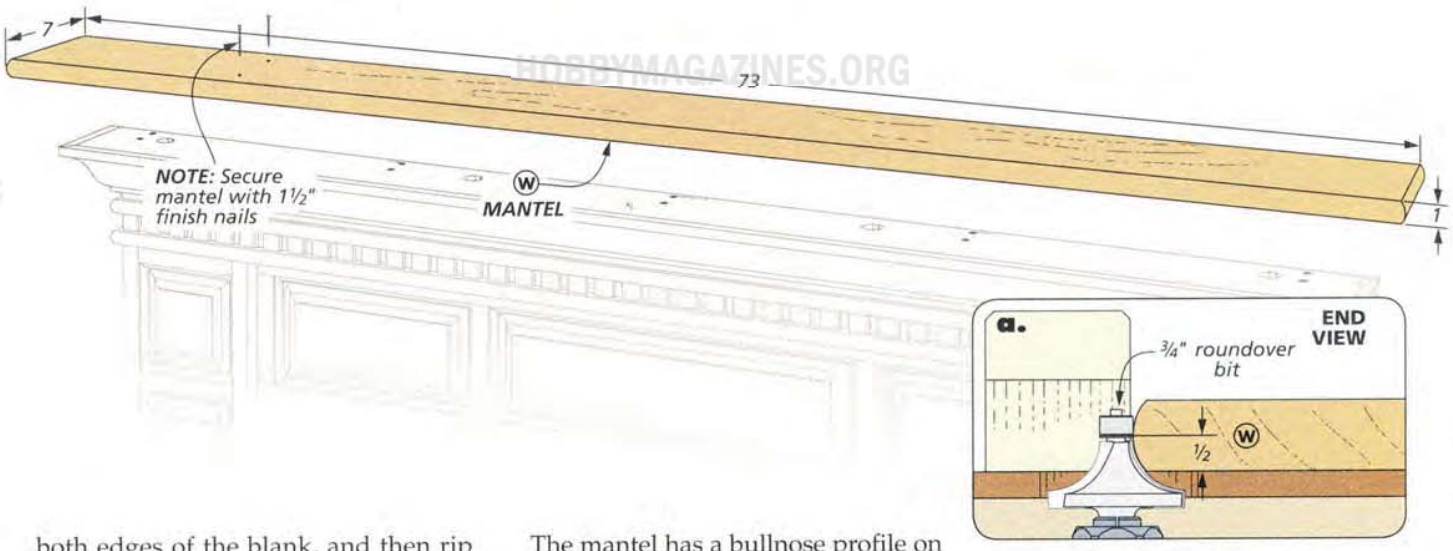

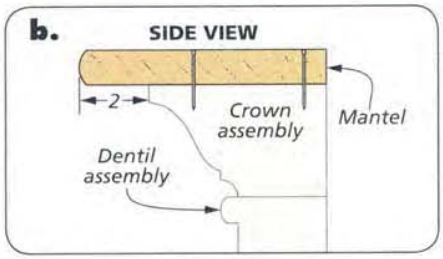

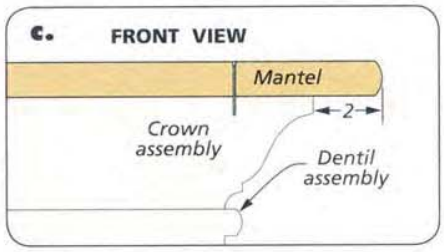

both edges of the blank, and then rip two strips of molding free. Repeat the process for as many pieces of panel molding as you need.

After staining and finishing all of the panels and the molding, you're ready to add them to the surround. Start by centering each panel in its opening, and then drive in a couple finish nails to hold it in position. Finally, miter the panel molding to fit, and secure it in place with small brads.

MANTEL. The last part of the fireplace surround is the mantel. It's also the simplest. It's nothing more than a long and wide solid-wood board that goes on top of the assembly.

The mantel has a bullnose profile on the front edge and ends that matches the one on the bullnose molding. But the mantel is 1" thick, so you'll need a ¾" roundover bit to create the profile. It's made using the same technique as before (detail 'a'). Then the mantel is centered above the crown molding and secured with finish nails.

SURROUNDED WITH WARMTH. Most people would agree that a fireplace adds a lot of value and comfort to the living space of a home. By adding this elegant wood and tile surround, you can make the fireplace a home feature you'll be sure to enjoy year-round — even when it's not cold outside.

Materials, Supplies, & Cutting Diagram

A	Plinth Sides (4)	¾ x 2⅝ - 11¼	K	Header Top/Bottom (2)	1 x 1½ - 48	U	End Header Panels (2)	¾ x 5⅞ - 11⅞
B	Plinth Tops/Btms. (4)	¾ ply. - 2⅜ x 7¾	L	Header Backer (1)	¾ ply. - 6½ x 48	V	Panel Molding	5/16 x 5/16 - 310 rgh.
C	Plinth Fronts (2)	¾ x 8¾ - 11¼	M	Bullnose Molding (2)	¾ x 3 - 65	W	Mantel (1)	1 x 7 - 73
D	Column Sides (4)	1 x 2½ - 35¾	N	Dentil Molding	1 x 2½ - 80 rgh.			
E	Column Tops/Bottoms (4)	1 x 2½ - 6	O	Crown Top (1)	¾ x 4⅜ - 67¾			
F	Column Backers (2)	¾ ply. - 6½ x 34¼	P	Crown Bottom (1)	¾ x 2¼ - 63½			
G	Divider Rails (2)	1 x ¾ - 6	Q	Crown Spacers (5)	¾ x 1¾ - 2¼			
H	Spacer Blocks (6)	1 x 2 - 6	R	Upper Col. Panels (2)	¾ x 5⅞ - 5⅞			
I	Column Molding	1 x 2⅜ - 40 rgh.	S	Lower Col. Panels (2)	¾ x 5⅞ - 26⅝			
J	Header Dividers (4)	1 x ¾ - 6	T	Center Header Panel (1)	¾ x 5⅞ - 19⅞			

- (40) #8 x 1½"Fh Woodscrews
- (4) #8 x 3"Fh Woodscrews
- (1) 12" x 12" Piece of Walnut Veneer
- (8 lin. ft.) 4¼" Crown Molding
- ½" Brads
- 1½" Finish Nails

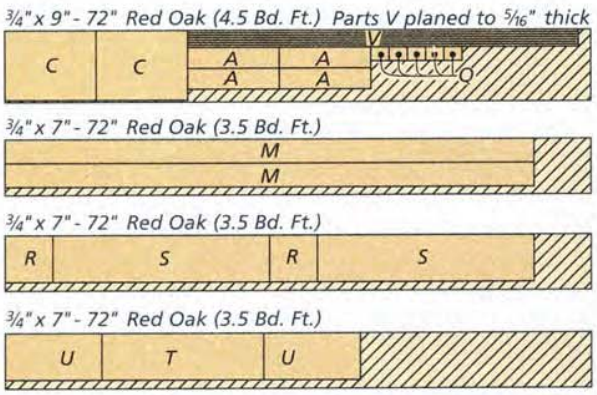

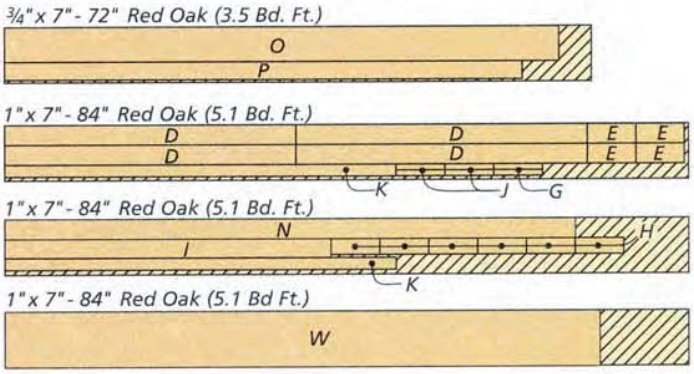

ALSO NEEDED: *One 24"x 48" sheet of ¾" Cabinet-Grade Plywood*

HOBBYMAGAZINES.ORG

7 strategies for perfect Panel Glueups

▲ Wavy, cathedral grain (upper boards) can be more difficult to match up than tight, vertical grain (lower boards).

Making a wide panel out of narrower boards is a fundamental woodworking skill. And while there's nothing wrong with using plywood in woodworking, there's something to be said for an heirloom piece of furniture that is crafted entirely from solid wood.

Gluing boards edge to edge seems simple in concept, but there's a bit more to it. These tips will help take you from good to great glueups.

[1] Choose Wood Carefully

With most panel glueups, the idea is to make the panel look like a single, continuous piece of wood. Achieving this goal requires finding boards with a good grain and color match. This is often as simple as setting boards side by side during the selection process, whether you're at the lumberyard or in the shop.

There's another consideration at play here, too, and that's the direction of the growth rings on the ends of the boards. Across the panel, you'll want some of these rings oriented opposite the others in order to prevent bowing in the completed panel (drawing, opposite page). While it's not critical that every ring be opposite the one next to it, be mindful of this when laying boards out side by side.

[2] Get the Thickness Right

Once you have the boards on hand for your panel, the next stop is the thickness planer. Here, you can go through the process of getting all the boards to the same thickness. There may be some more flattening to do once the panel is glued up, but this initial thicknessing of the workpieces will get you started on the right foot.

HOBBYMAGAZINES.ORG

HOBBYMAGAZINES.ORG

[3] Size the Parts Properly

The width of each board within a panel will vary from project to project. But as a general rule, I try not to go much wider than 6" for any individual board. Wider boards have a tendency to twist or cup, so it's best to take this out of the equation from the start.

As for length, start with pieces 3" to 4" longer than the finished panel. This will give you some "fudge factor" during the glueup and allow you to trim it to final size easily afterward.

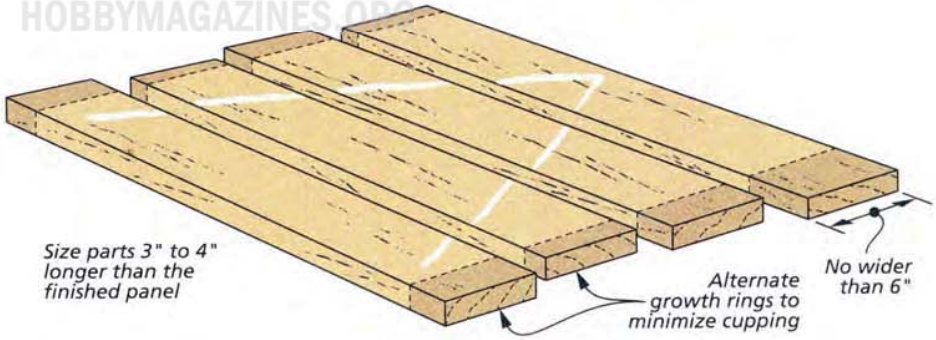

[4] Joint the Edges

You're just about ready to get out the glue and clamps. But first, there's one more step I always like to do before joining the boards. And that's a few passes over the jointer to dress all the edges that will be glued together. This ensures flat edges that will align perfectly.

▲ Before you glue up a panel, a quick trip to the jointer to flatten and square up all the mating edges is a must.

[5] Do a Dry Run

Your wood should now be ready to go together in a seamless, great-looking panel. Before getting out the glue, though, it's best to do a test run by clamping the panel together without any glue. This gives you a last chance for a visual inspection and an opportunity to reposition boards for a better grain flow if needed. Once you get it perfect, mark the top of the panel with a large "V" across all the boards. This is your guide for correctly aligning the boards during the actual glueup.

[6] Clamp It Right

It's finally time to get down to business. Gather all your needed supplies like glue, a brush, and wax paper, and set the clamps that will go beneath the panel in position. Have clamps to go over the panel at the ready. Now set the boards on edge, and brush a layer of glue onto one edge for each mating joint. Set the boards face down, and begin to add the clamps.

I like to assemble my panels by alternating the clamp position — one clamp under the panel, one over the panel, and so on — to get even clamping pressure. As you tighten the clamps, make sure the lines of the "V" are close to being aligned. You can use a dead-blow mallet to coax boards into position, or you may even want to clamp the ends of the panel to keep them flat.

There will likely be some glue squeezeout on the joint lines of your glueup. To remove this cleanly, wait about an hour, remove the clamps, and then scrape this partially set-up glue from the surface.

[7] Multiple Glueup Approach

For a small panel, you may be able to do just one glueup to complete the job. A different approach to larger panels, though, is to make smaller glued-up panels first. This lets you focus on one or two joints at a time, rather than several. Plus, you can put the smaller panels through your planer one more time before gluing them together into a larger panel.

Either way you approach the job, the basic concepts presented here remain the same. And the result will be a flat, smooth panel that's sure to look great in your completed project. W

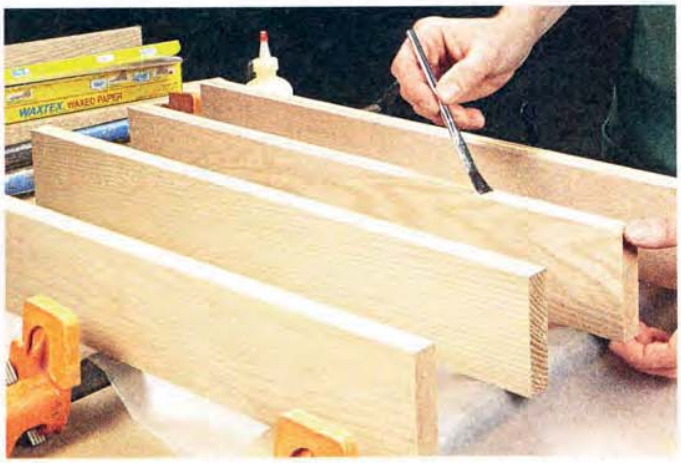

▲ As you're preparing for the glueup, stand the boards on edge and brush a thin layer of glue onto one edge of each joint. Then you can put the boards face down and get ready to apply the clamps.

▲ There's bound to be some glue squeezeout after clamping the panel together. Let this set up for about an hour, and then remove the partially dried beads of glue with a scraper.

HOBBYMAGAZINES.ORG

HOBBYMAGAZINES.ORG

choosing & using Countersinks

Drilling a countersink is a fairly straightforward process. The goal is to create a cone-shaped recess at the top of a hole to act as a seat for a screw head. To determine which countersink bit is right for you, a couple factors need to be considered before you drill.

ANGLES & SIZES. First, you need to know the angle of the countersink bit in order to match the screw angle. While there are bits with several different angles available, 82° and 90° are the two most commonly used in woodworking. While a countersink with a 90° angle is generally used with metric screws and hardware, 82° is the *Unified Thread Standard* in the United States that most screw manufacturers follow.

The illustration at right shows a side-by-side comparison of the two screw angles. The drawback of using the wrong countersink is clear. Driving an 82° screw head in a 90° countersink results in a gap between the screw head and the workpiece. Conversely, a 90° screw head installed in an 82° countersink simply crushes the fibers around the edge of the hole.

The next consideration when choosing a countersink bit is the size of the screw you will be placing in the hole.

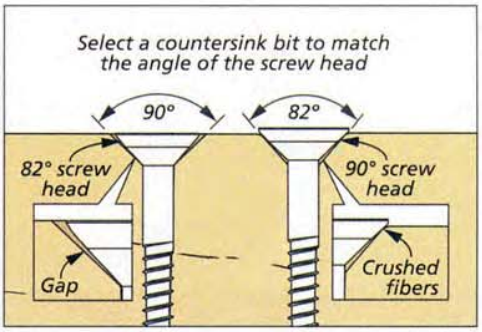

Some bits will only drill one fixed size countersink, while others are adjustable and can be used to place several different sizes of screws. With these factors in mind, let's take a look at some of the countersink bits available.

SINGLE FLUTE. With just one cutting edge, or flute, the single-flute countersink bit excels at drilling countersinks in wood, plastics, and nonferrous metals. I've found they work best in a drill press where they can be run at a slower speed. This helps to prevent the bit from vibrating and creating ridges on the edge of the hole.

▼ Several dedicated countersinks with the ability to handle both woodworking and metalworking applications are available.

HOBBYMAGAZINES.ORG

HOBBYMAGAZINES.ORG

Single-flute countersinks are typically available in most home centers and hardware stores and are relatively inexpensive. However, I've found this 82° countersink bit from *Lee Valley* (bottom left, opposite page) to work exceptionally well. And its large diameter means it's capable of countersinking screws from #0 to the largest size.

MULTI-FLUTE. Much like a single-flute countersink, a multi-flute bit also uses flutes to cut away the material. But instead of just one, it utilizes several cutting edges (bottom middle photo, opposite page). They are typically available with anywhere from two to six flutes.

The additional flutes mean more material is removed during the cut. This is a great advantage when speed is required to drill multiple countersinks. The multiple flutes also allow these bits to cut cleaner than single-flute bits.

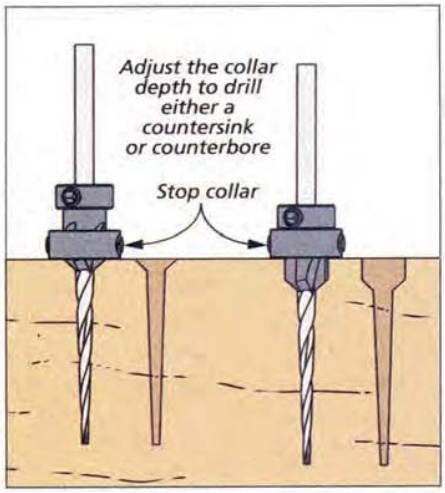

Perhaps the greatest advantage of a multi-flute countersink is its longevity. With several cutting edges bearing the load, the life of the bit is greatly extended. This is particularly beneficial if you've invested the money in a quality bit.

ZERO-FLUTE. Also known as a crosshole countersink, the zero-flute bit (bottom right photo, opposite page) doesn't use flutes at all to drill a countersink. Instead, it has a crosshole drilled through the middle of the bit. The edge of this hole is what actually does the cutting of material.

Because of this unique cutting style, these bits tend to have the least amount of vibration and chatter during use. This in turn leaves a very smooth, clean hole in both wood and metal.

Zero-flute bits are available in several different diameters. I've found the 3/8" and 1/2" bits, shown on the opposite page, cover about 90 percent of the countersinking duties in my shop.

COMBINATIONS. Drill and countersink combinations are capable of drilling a countersink and a pilot hole at the same time, shown above right. Designed primarily for woodworking, these "combo" bits are available with straight or tapered drill bits. The tapered bits match the shape of standard tapered wood screws. This ensures the screws grip the wood for the entire length of the screw's shank. Since combination bits only work for one size of screw, they are typically sold in sets to cover most of the standard sizes.

The exception to this rule is the adjustable countersink (bottom photo, above). You provide the drill bit for this setup, and the carbide cutters adjust to fit the bit, from 7/64" to 9/32". This allows you to drill pilot holes and countersinks for many different sizes of screws. It's a less expensive option than buying an entire set.

Another nice feature of a combination countersink is a stop collar. As shown at left, the stop collar allows you to set the depth of a countersink. By adjusting the collar higher on the cutter, it can also drill a counterbore. A wood plug can then be used to fill the counterbore and cover the screwhead.

Whether you're looking to drill pilot holes and countersinks simultaneously, or you simply need the fastest way possible to drill many countersinks on a project, one of these bits is sure to do the trick. And for drilling countersinks in tight spaces, keep reading below.

REVERSE COUNTERSINK

Drilling countersinks in the inside of a drawer, where clearance is limited, can be a challenge. That's where a tight-spot reverse countersink comes in handy (right photo).

This countersink consists of a long shaft and a removable countersink cutterhead. The shaft is chucked in a drill and inserted through a pre-drilled pilot hole. The cutterhead then hooks to the end of the shaft via a small notch. With the drill running forward, pull back to countersink the hole.

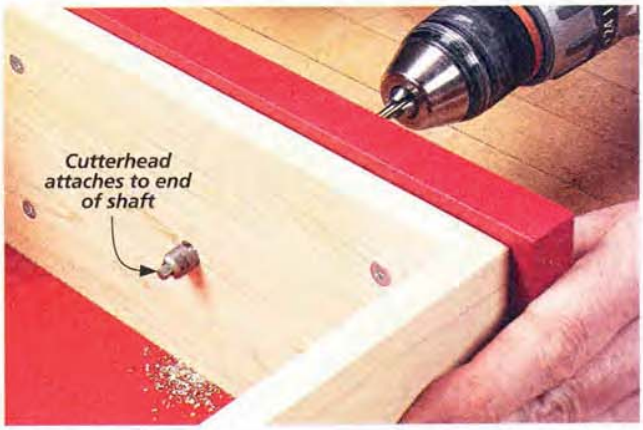

▼ The tight-spot reverse countersink cutterheads are available in many different sizes from 3/32" to 1/4". Shanks are 6" long and available in diameters to match the cutterheads.

HOBBYMAGAZINES.ORG

working with Rasps & Files

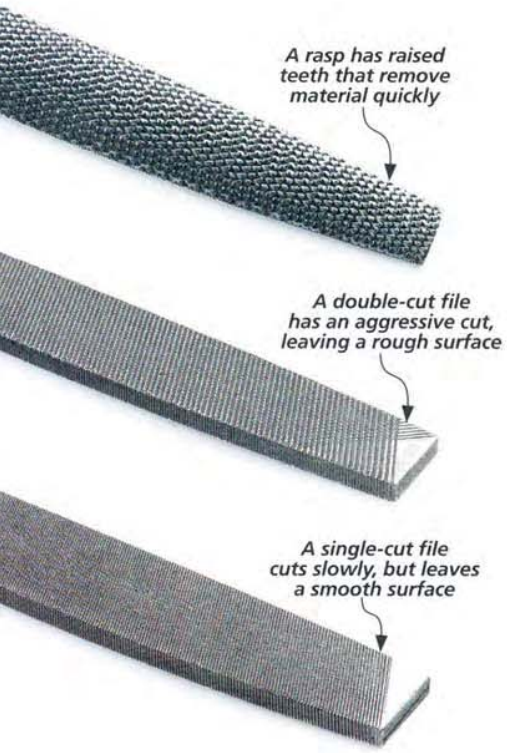

Whether you cut curved parts at the band saw, with a jig saw, or by hand with a coping saw, your job is only halfway done. You still have to shape, refine, and smooth the parts. For that, you need a good set of rasps and files. They're the perfect answer when you have to shape a workpiece. The fish whirligig on page 22 is a perfect example.

RASPS. Rasps remove stock in a hurry, so they're the go-to tools for the initial shaping work. They feature sharp teeth that protrude from the body of the tool. These teeth can be either cut into the steel blank by a machine or by hand.

The process of forming teeth is called stitching. As you'd expect, the hand-stitched variety costs a bit more, but their performance justifies the cost.

Machine-cut rasps suffer by comparison because the teeth are usually aligned and leave grooves in a workpiece. Hand-stitched rasps have a random pattern and leave a smoother surface.

Hand-stitched rasps are also available in several different grades of coarseness. These are known as "grains," and they typically run from 1 to 15, with 1 being the roughest and 15 being extremely fine.

Machine-cut rasps offer a more limited selection, often labeled smooth, second-cut, and bastard. The commonly available *Nicholson* #49 is a second-cut rasp, and the #50 is called smooth. In reality, they are coarse and somewhat less coarse, respectively.

FILES. Files are normally associated with metalworking. These are the tools for shaping steel. But they can also be of use to woodworkers. The biggest advantage of files is the different profiles. Flat, round, half-round, triangular-shaped, and square files are common.

The teeth of a file are almost flat, but each tooth has a forward-facing, angled cutting edge. The photos at left show both single-cut and double-cut files, so named for the rows of teeth.

HOBBYMAGAZINES.ORG

HOBBYMAGAZINES.ORG

TECHNIQUES

Even though files and rasps have different types of cutting edges, the techniques for using them are largely the same. A two-handed grip gives better control, and a skewed angle of attack is usually best. And you'll get better results when you use a light stroke.

MARKING THE SHAPE. It's a good idea to mark the workpiece with the shape of the profile, since the stock will be cut away quickly. In the photo at right, you can see an example of how to mark the end of a workpiece with the profile you're shooting for. This makes it much easier to gauge your progress and helps stop you from going too deep.

HOLDING THE WORKPIECE. Just like any other hand tool work, shaping requires that the workpiece be held firmly in position. The main photo on the opposite page shows how I use a carving vise to hold the piece while I round over the edges with a rasp. Not only is the vise versatile enough to hold the workpiece at many different angles, but the firm grip also prevents chatter while you work.

SHAPING. With the workpiece secured, you're ready to begin shaping. At this point, you're probably thinking that this is old hat, and that no instruction is necessary. But I've watched many experienced woodworkers make a fundamental mistake when shaping a workpiece. The tendency is to push the rasp or file with a saw-type stroke. That is, they push and pull the rasp over the surface. The problem with this approach is that you can dull a rasp rather quickly by putting pressure on the pull stroke. The teeth can bend backwards under the pressure, especially on a hand-stitched rasp.

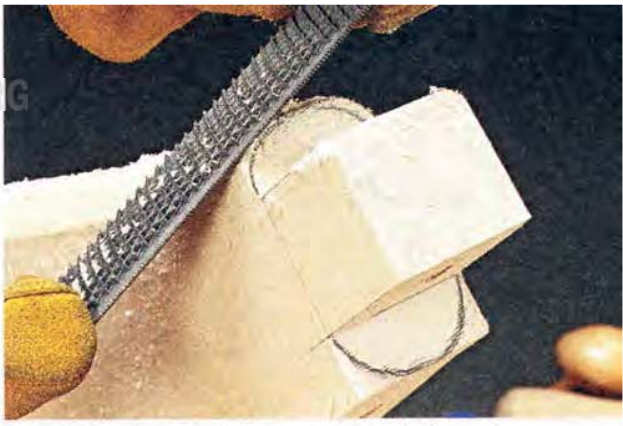

▲ Marking the desired shape on the end of a workpiece is an easy way to avoid cutting too deeply. You can also check your progress as you go.

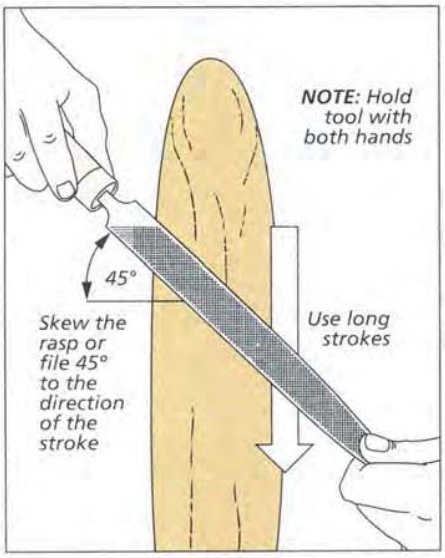

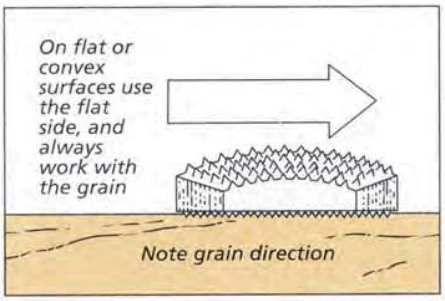

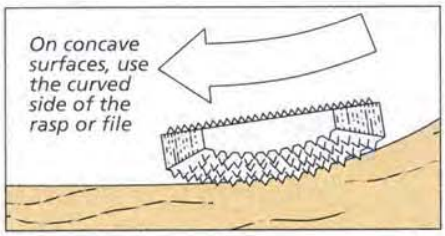

STROKE. The far left drawing shows a normal stroke with the tool skewed at roughly 45° relative to the workpiece. By moving the tool from right to left as you go, you can remove a lot of material. Just remember to slightly lift the tool on the return.

The two drawings at left show how to deal with grain direction. As a rule, you'll want to work with the grain and move "downhill" on curved parts. But if you're leveling a large area, working across the grain is fine, since you're going to smooth it over in subsequent passes.

Rasps and files have been around for a long time. The box below shows a different idea that has found popularity with many woodworkers today. But no matter which tool you prefer, with a little practice shaping curved parts is well within your capabilities. W

SHINTO RASPS

For years, I thumbed through woodworking tool catalogs and chuckled when I saw the *Shinto* rasps shown in the photo at right. Let's face it, the design seems a little odd.

So I was quite surprised when I finally decided to give the *Shinto* a more serious look. It not only cuts well in hard and soft wood, but it leaves a smooth surface. And it's almost impossible to load up with shavings and sawdust like a conventional rasp. The open, diamond pattern of the blades lets the shavings escape freely.

The top rasp at right features a comfortable handle that makes it easier to use, but it's a bit cumbersome when you need to switch from one face to the other. The simpler version below it is the way to go.

Unfortunately, the *Shinto* rasps are only available in a flat profile. But they're certainly worth a look. Refer to Sources on page 51 for where to find them.

▲ Both sides of the *Shinto* rasp are cutting surfaces. The coarse face features 10-TPI blades and the opposite, finer side is 24-TPI.

HOBBYMAGAZINES.ORG

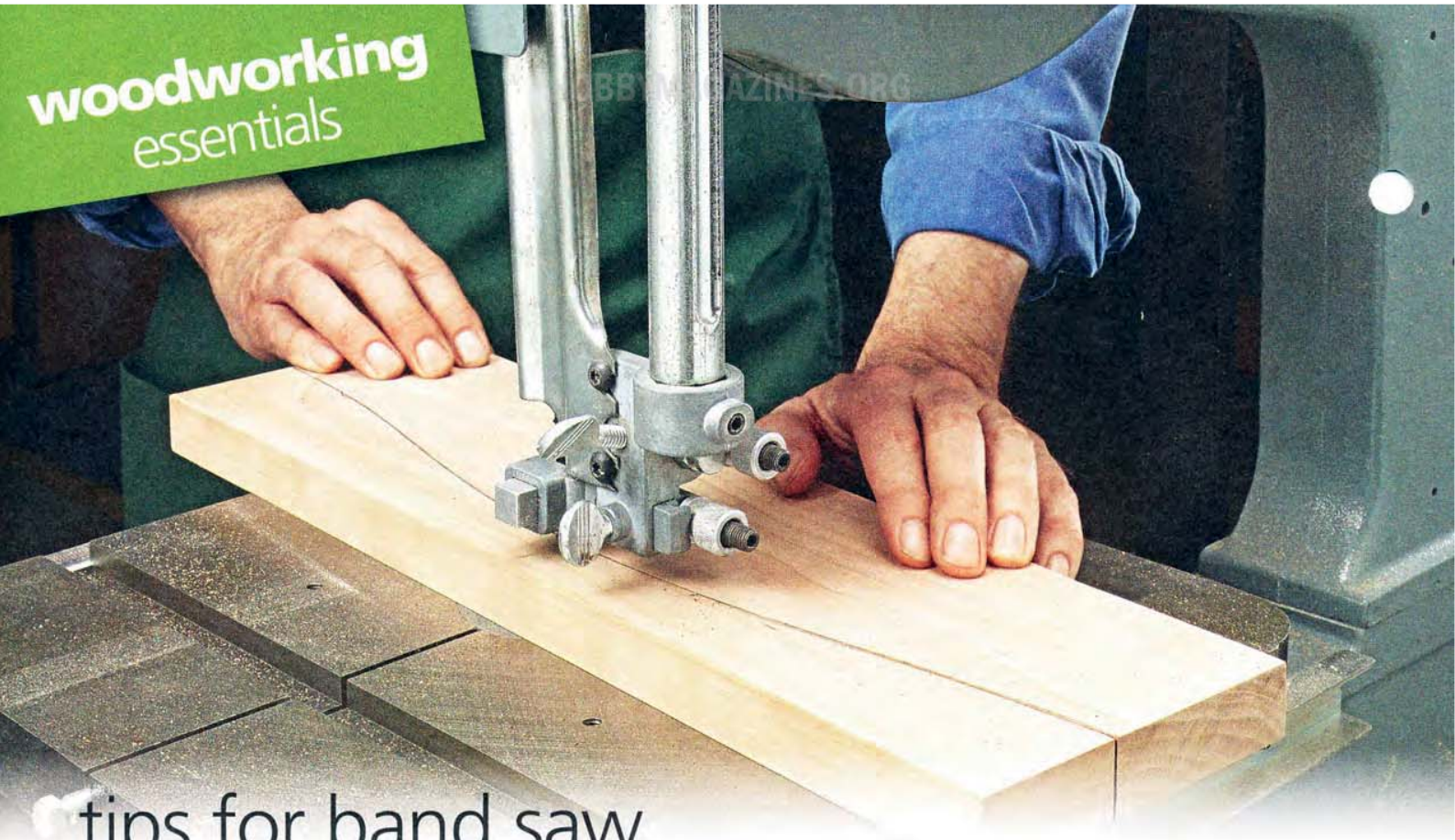

tips for band saw

Curve Cutting

Curved parts can add a higher level of interest and elegance to an ordinary woodworking project. And, along with resawing, cutting curves is probably one of the main reasons you purchased a band saw in the first place.

While a band saw certainly excels at making curved cuts, great results are not automatic. It requires proper setup and technique to get perfect curves. Fortunately, a few simple tricks will have you cutting curves like a pro.

LAY IT OUT PROPERLY. A perfect curve, of course, starts with a good layout line. And as you can see below, there are a couple of ways to go about it. For a gentle arc, for example, you can simply bend a thin strip of wood to meet the center and end points. String can help hold the position while you mark it.

To achieve a precise radius, a compass is the tool of choice for accurate marking. In addition, you'll often find patterns included with a plan for more elaborate curves. These can be transferred or glued directly to the workpiece.

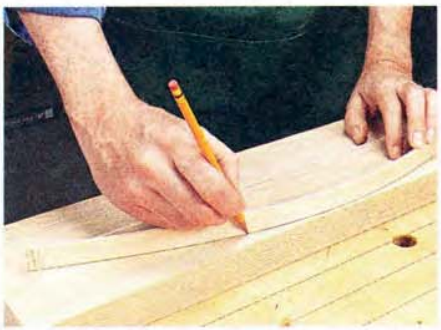

▲ It's easy to lay out an arc on a workpiece by bending a thin wood strip. String between the ends holds it in position.

▲ For a radius cut on a workpiece, it's tough to beat the ease and simplicity of using a compass to lay out the cut.

SET UP YOUR SAW. You'll also need to set up your band saw with the correct blade to make the curved cut successfully. In general, the narrower the blade is, the tighter the radius it will be able to cut. The chart at the top of the next page gives you a good overview.

Once the right blade is in place, also take some time to tension the blade properly and adjust the guide blocks and bearings to prevent the blade from drifting or twisting. Finally, lower the guide block assembly so it's close to the top face of the workpiece. These steps will all help the blade track properly while following the curve.

CUT IT CORRECTLY. When cutting a curve, you're basically following a pencil line. The best advice is to take your time and not force the cut. This not only helps you get more accurate results, but it also prevents the blade from deflecting.

Rather than cutting right to the layout line, I suggest cutting slightly to

HOBBYMAGAZINES.ORG

HOBBYMAGAZINES.ORG

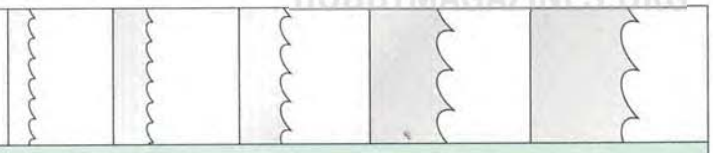

Blade Width	1/8"	3/16"	1/4"	3/8"	1/2"
Minimum Radius	3/16"	5/16"	5/8"	1 1/2"	2 1/2"

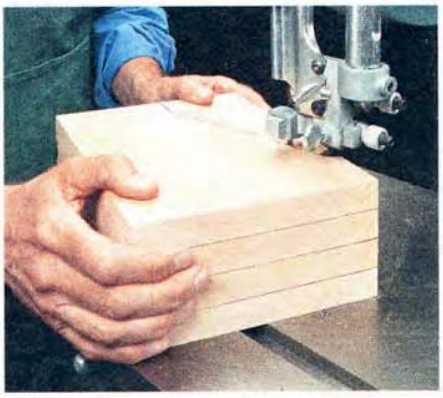

▲ For project parts with identical curves, stack them with double-sided tape in order to make just a single cut.

the waste side of the line. When you're done, you can smooth the rough cut line by sanding to the finished dimensions. Another option is to cut a matching template from hardboard, and then use the template along with a router to flush-trim the part to the proper shape.

SECRETS OF SUCCESS. A few other simple tricks will lead to great results for curves. For example, when a curve has a tight radius in a corner, it can sometimes be difficult to follow with the blade alone. I often drill a hole to match the radius, which provides an open space to turn the blade (photo above).

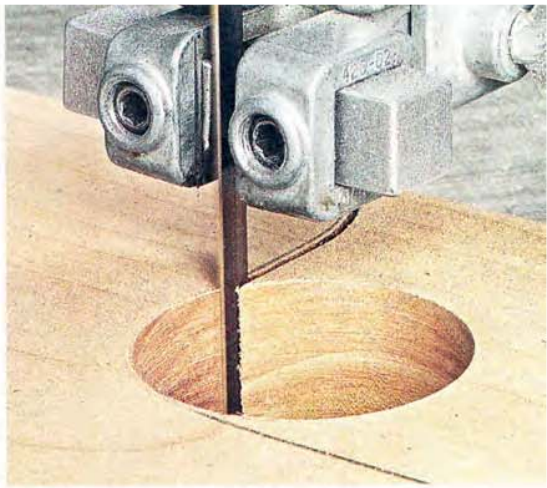

▲ When a curve or notch has a radius at the corner, you can simplify the cut by drilling a hole to match the radius.

Many projects call for multiple parts with the same curved cut. To make this task easier, you can carefully lay out the curve with a pencil on just one of the project parts. Then "gang" all the blanks together with double-sided tape between them, raise the band saw's guide block assembly, and create the curve with just one cut, as shown in the upper left photo.

Finally, many curved parts have one curve that's exactly parallel to the other curve. The two photos at left show a couple of approaches for handling this situation. After cutting one side of the curve, you can use a fence to guide the cut edge as you trim the parallel curve on the opposite edge. This adds an extra degree of accuracy to the cut, which you'll be sure to appreciate when it comes time to assemble the project later on.

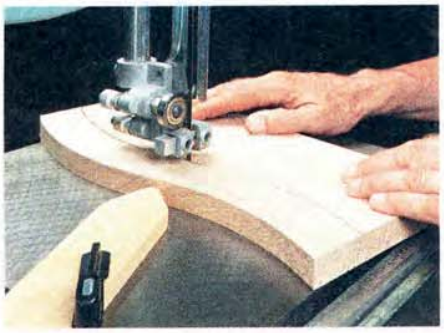

▲ A single-point fence helps you cut a curve that's parallel to the edge when the curve changes directions.

▲ For simple curves, you can make a parallel curved cut by using the band saw rip fence as a guide.

TIPS FOR ADVANCED CUTS

Not every curve required for your woodworking projects is going to be a simple radius or arc. Many furniture designs call for elaborate profiles with tight turns and multiple curves. The key in these situations is to take the time to plan the cut before heading to the band saw. As you can see in the drawing at right, often it's a good idea to rough-cut the basic, outer shape of the profile first. Once that's done and the waste piece is out of the way, you can zero in on the fine details that make up the rest of the profile.

In some cases, the corners or turns of a profile may be too tight for your saw's blade to make cleanly. In these situations, you'll want to make a "relief" cut. This simply involves cutting into the corner, and then backing the blade out of the cut. After that, you can approach the curve or corner from the opposite direction in order to successfully complete the cut.

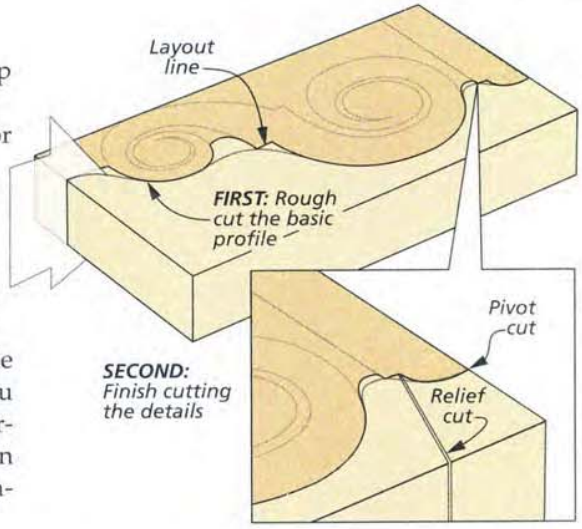

HOBBYMAGAZINES.ORG

questions & answers

avoiding Router Burns

Q *My router keeps leaving burn marks on the edges of my workpiece. What am I doing wrong?*

Mitchell Caldwell
Fremont, Nebraska

A Almost every woodworker has experienced ugly burn marks while using a router. These burn marks are the result of excessive heat buildup caused during the routing process.

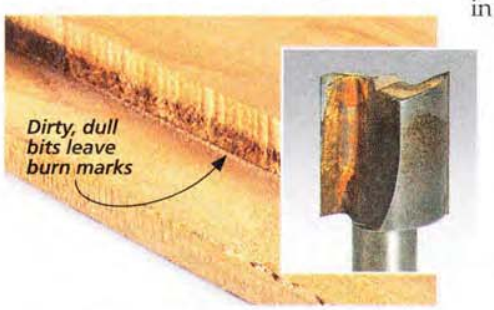

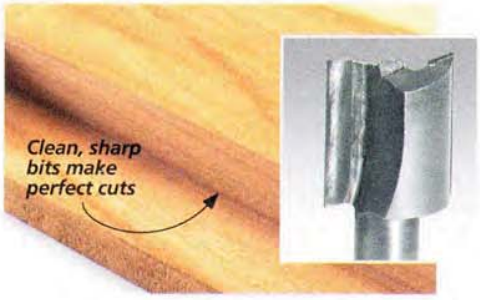

Fortunately, there are several precautions you can take to help alleviate this problem in the future.

CLEAN BITS. Keeping router bits clean isn't very high on most woodworkers' priority list. After use, the bits typically just get put back in their holders or, worse yet, tossed in a drawer until needed the next time. Unfortunately, the drag caused from dust and resin buildup makes bits heat up faster. This, in turn, can cause burn marks on your workpiece. At a minimum, you should wipe the dust off the bit after each use and occasionally use a special blade and bit cleaner to remove any resin.

SHARP BITS. Keeping bits clean will also go a long way toward helping to keep them sharp. The less heat buildup during the cut, the longer the bit will keep a sharp edge. And there's much less chance of causing burn marks with sharp bits.

Even if you keep your bits clean, they may need to be sharpened on occasion. It's easy to touch up bits that have flat surfaces on a flat diamond whetstone. It's best to leave the sharpening of rounded profile bits to a professional.

WATCH YOUR SPEED. Consistency is the key when it comes to the feed rate of your cuts. If you slow down, or stop moving the router, the bit keeps spinning. This builds a tremendous amount of heat very quickly, resulting in burn marks. Sometimes (while routing an edge profile, for example) it's necessary to pause during a cut to reposition the workpiece or change your stance. In this case, be sure to move the bit out of the cut momentarily and then move back into the cut where you left off after you've made the adjustments.

IN TOO DEEP. Sometimes woodworkers, myself included, get in too big of a hurry and try to remove too much material in one pass. This is a sure-fire way to cause burn marks. At a minimum, most cuts should be done in two passes. More passes may be necessary for deep cuts. The final pass should be very shallow and just barely skim the material. This removes any burn marks that may have occurred in a prior pass. It generally eliminates the need for additional sanding, as well.

The next time you pick up your router, take these simple precautions. They will certainly go a long way towards helping to eliminate burn marks.

HOBBYMAGAZINES.ORG

HOBBYMAGAZINES.ORG

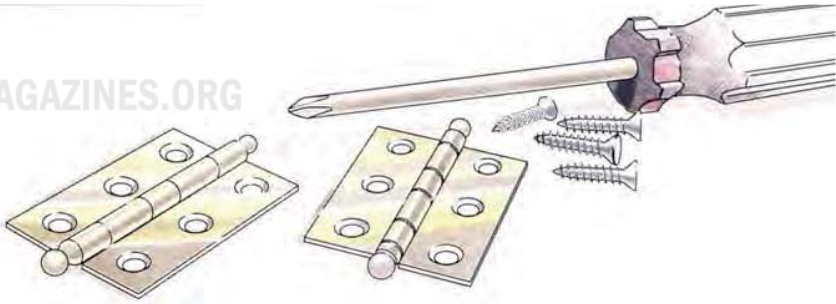

hardware & supplies
Sources

Most of the materials and supplies you'll need to build the projects are available at hardware stores or home centers. For specific products or hard-to-find items, take a look at the sources listed here. You'll find each part number listed by the company name. See the right margin for contact information.

WOODWORKING TAPES *(p.8)*

- **Woodcraft**
  Avery Dennison Tape.... 158738
- **Peachtree Woodworking**
  UHMW Slick Tape..... 1118
- **Home Depot**
  FrogTape..... 280222
- **Rockler**
  FastCap Speed Tape 45846
- **Lee Valley**
  Guard Tape..... 22R70.01

DRUM SANDERS *(p.10)*

- **Jet Tools**
  16-32 Drum Sander....629004K

DRILL ACCESSORIES *(p.12)*

- **Sears**
  Drill Guide 00967173000
  Flex Extension 00981147000
  Orbiter SPM2674271002
- **Home Depot**
  Right-Angle Attach..... 472192

Quick Chuck DWA2500

SQUARE ASSEMBLIES *(p.14)*

- **Rockler**
  Assembly Square..... 29190
  Mini Assembly Square... 27767

TOWEL RACK *(p.16)*

The towel rack is stained with a mixture of three parts *ZAR* Cherry Stain and one part *Wood Kote* Jel'd Cherry Stain. Then it's sprayed with two coats of lacquer.

WHIRLIGIG *(p.22)*

- **McMaster-Carr**
  1/4" Ball bearings 6138K65
  1/4" Shaft Collar.....6462K12
  1/4" Flanged Bushing..6338K413

The whirligig was painted with a white primer, then it got a coat of "Electric Regal Blue" for the body. Highlights are in red, black, and yellow. All the paints are from *Benjamin Moore*.

FIREPLACE SURROUND *(p.34)*

- **Amana Tool**
  Raised Panel Bit 54118
  5/16" Roundover Bit 49510
- **U.S. Building Products**
  Crown Molding..... F614

The veneer is available from a number of woodworking suppliers. The fireplace surround was stained with "Early American" oil stain from *Varathane* and sprayed with two coats of lacquer.

COUNTERSINKS *(p.44)*

- **Lee Valley**
  #8 Countersink 66J40.08
  #8 Countersink, 1/8" 50J04.08
  Adj. Countersink 15J70.01
  82° Countersink.....44J21.01
  82° Zero-fluted Set.... .06J50.20

- **McMaster-Carr**
  Multi-fluted Bit.....3013A112
  Reverse Countersink... 3309A46
  Reverse Shank..... 3309A34

RASPS & FILES *(p.46)*

- **The Japan Woodworker**
  9" Shinto Rasp..... 151297
  10" Shinto Rasp 153778

- **Woodcraft**
  #49 Nicholson Rasp 06B01
  #50 Nicholson Rasp 06B02

Get the all-new Season 7 DVD set of the *Woodsmith Shop*! The set includes two DVDs with all the episodes plus a CD-ROM with bonus plans and articles. Collect the entire series by ordering individual seasons for $29.95 or save with package deals. Learn more at Woodsmith.com!
DVD Set: Season 7..... $29.95

MAIL ORDER SOURCES

Project supplies may be ordered from the following companies:

Woodsmith Store
800-444-7527

Rockler
800-279-4441
rockler.com

Amana Tool
800-445-0077
amanatool.com

The Home Depot
800-466-3337
homedepot.com

Japan Woodworker
800-537-7820
japanwoodworker.com

Jet Tools
800-274-6848
jettools.com

Lee Valley
800-871-8158
leevalley.com

McMaster-Carr
630-600-3600
mcmaster.com

Peachtree Woodworking
888-512-9069
ptreeusa.com

Sears
800-697-3277
sears.com

U.S. Building Products
800-284-5194
usbuildingproducts.com

Woodcraft
800-225-1153
woodcraft.com

For a current list of updates or revisions to past issues, please visit woodsmith.com/magazine/updates.

HOBBYMAGAZINES.ORG

online extra

Full-Size Patterns of the Fish Whirligig

HOBBYMAGAZINES.ORG

The whirligig is an unusual project in that there are very few dimensions that are useful to the builder. Instead, I've included some full-size patterns to help you create the parts. The fins and tail patterns are ready to use. Just print them out and you're ready to go. The body pattern takes up three pages, but I've included lines on each page to show where to cut and splice them together.

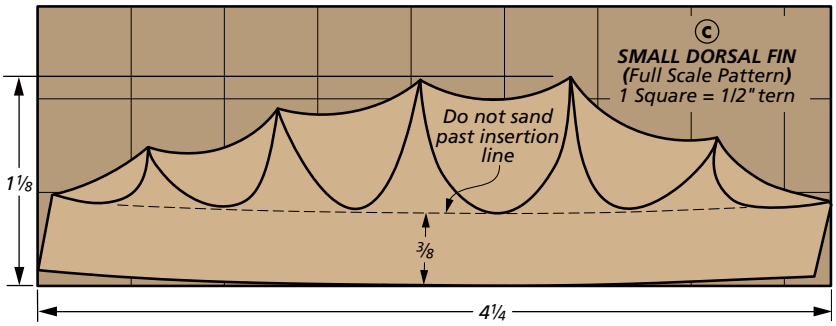

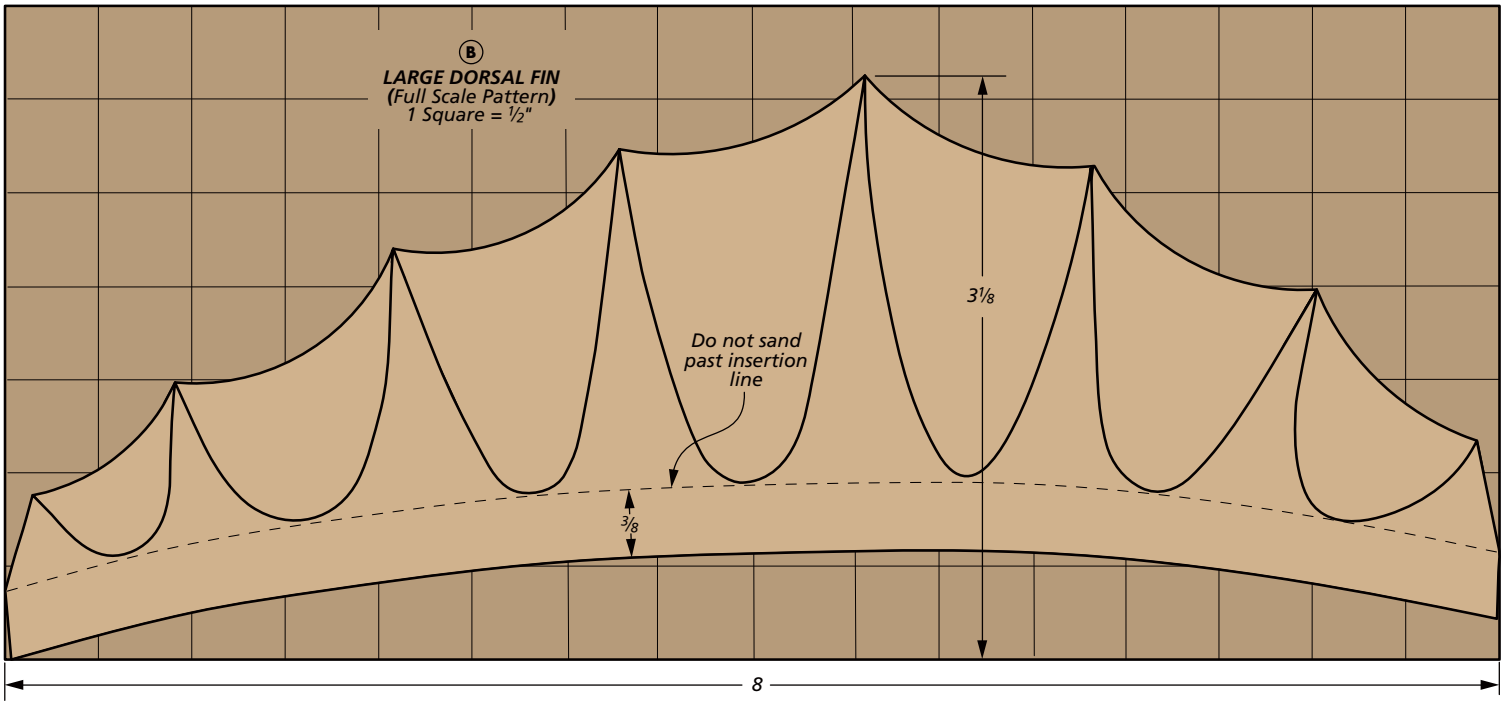

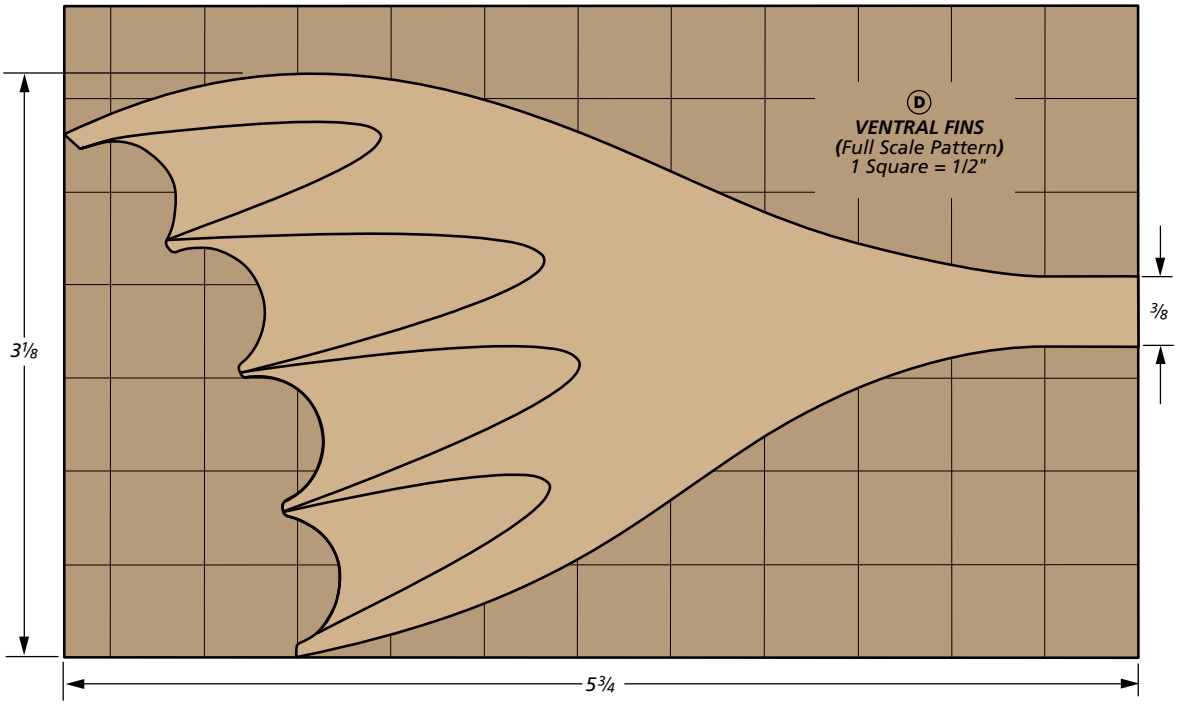

HOBBYMAGAZINES.ORG

 ©2014 August Home Publishing. All rights reserved.

HOBBYMAGAZINES.ORG

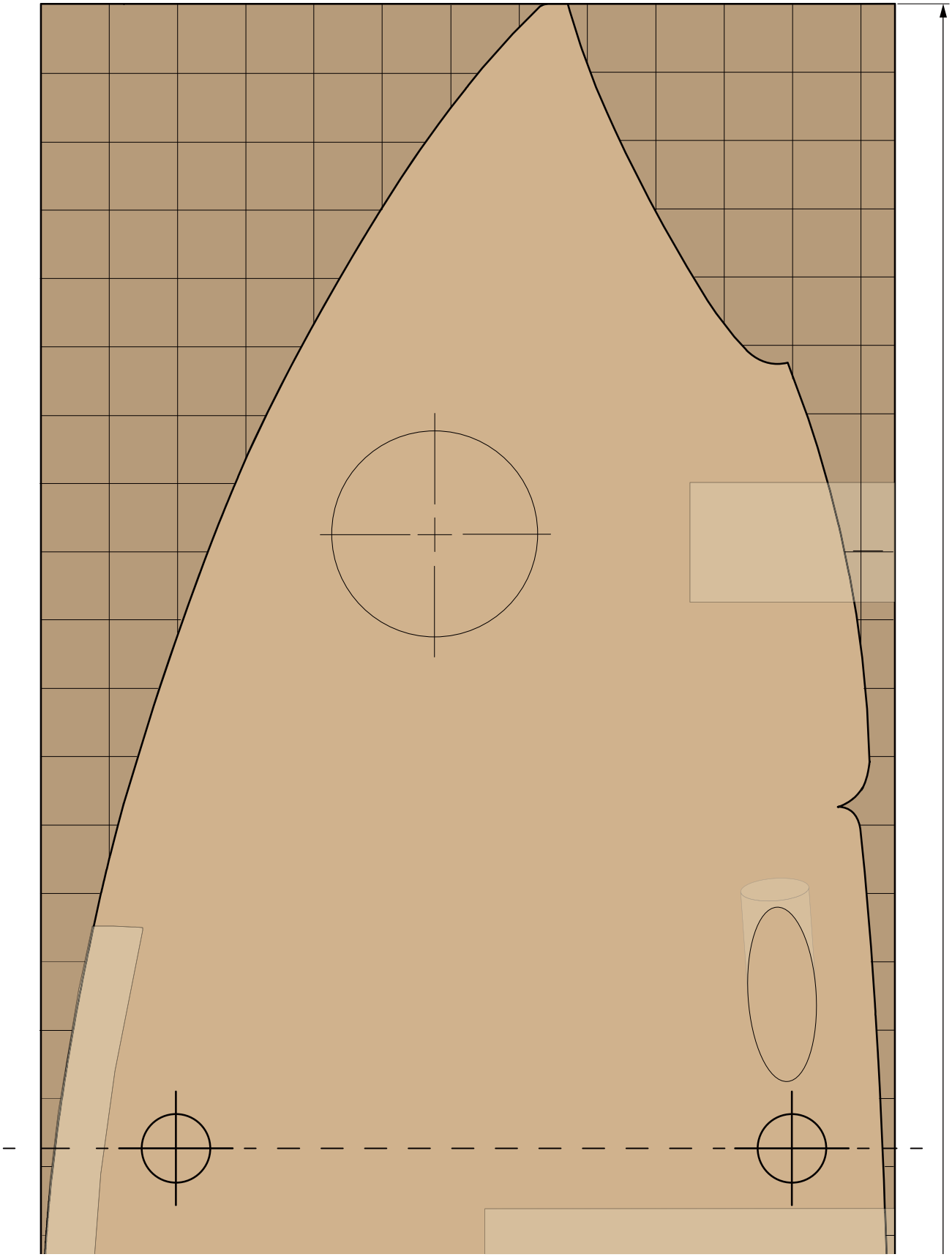

HOBBYMAGAZINES.ORG
©2014 August Home Publishing. All rights reserved.

HOBBYMAGAZINES.ORG

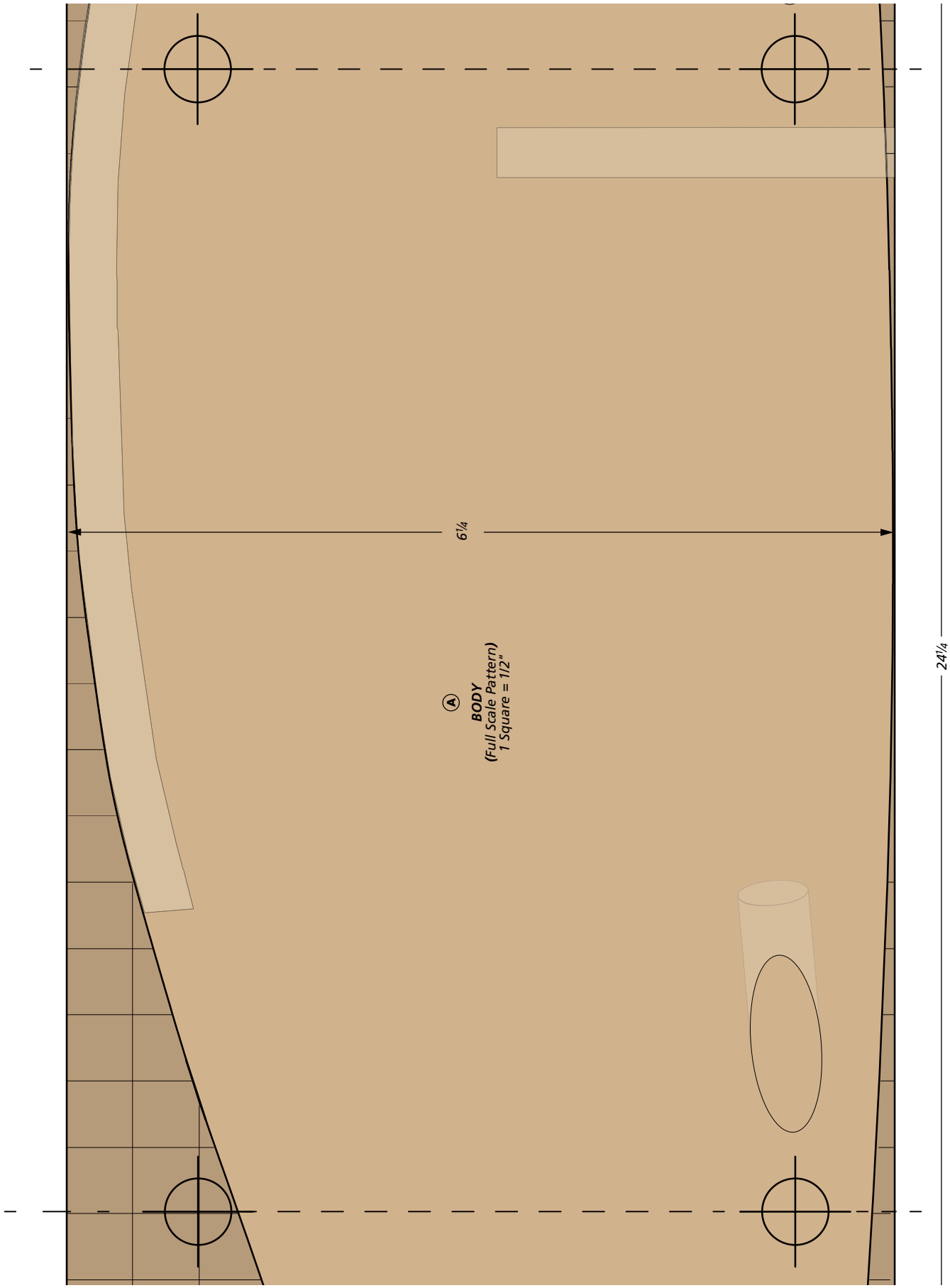

HOBBYMAGAZINES.ORG

 ©2014 August Home Publishing. All rights reserved.

HOBBYMAGAZINES.ORG

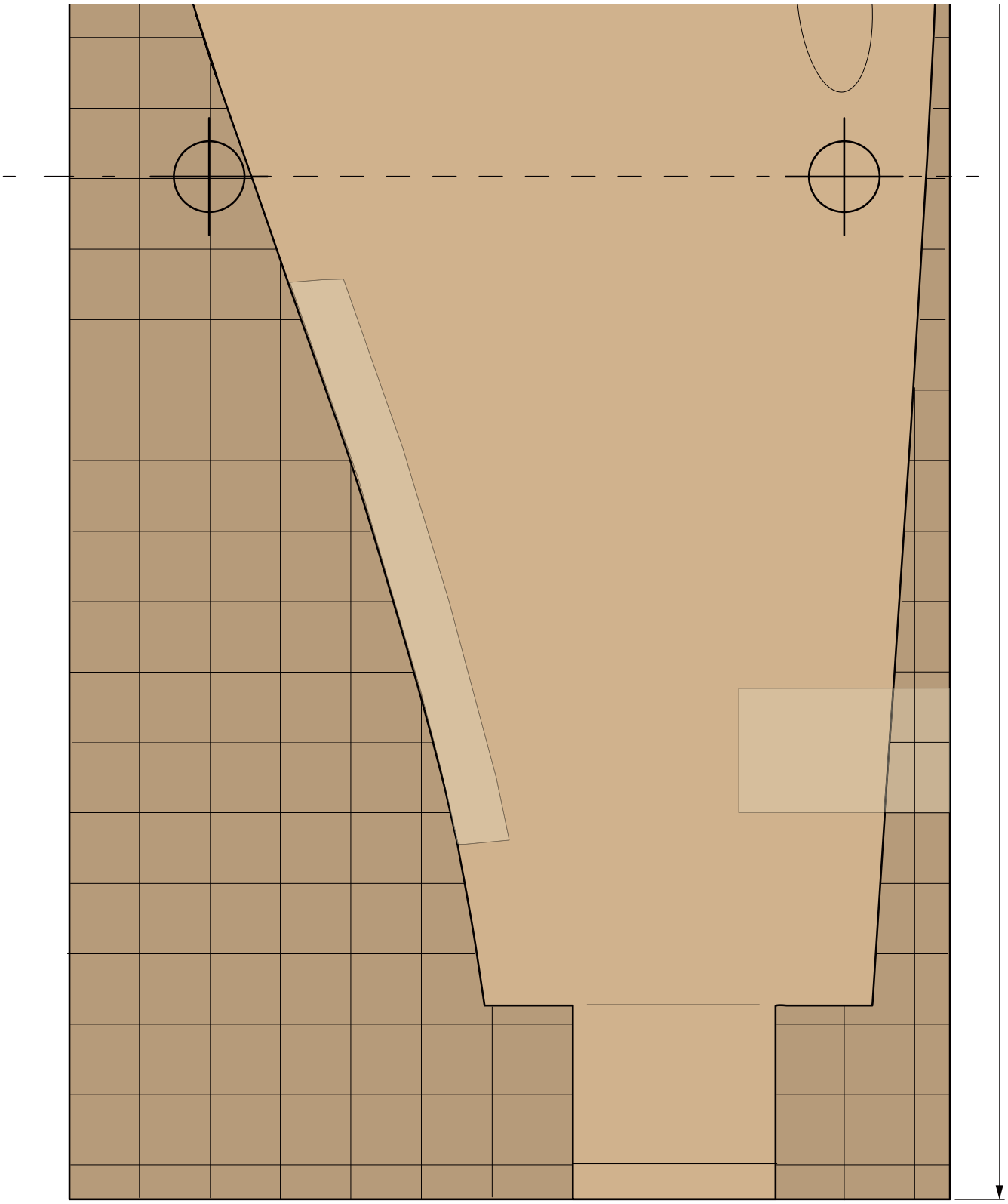

HOBBYMAGAZINES.ORG

 ©2014 August Home Publishing. All rights reserved.

HOBBYMAGAZINES.ORG

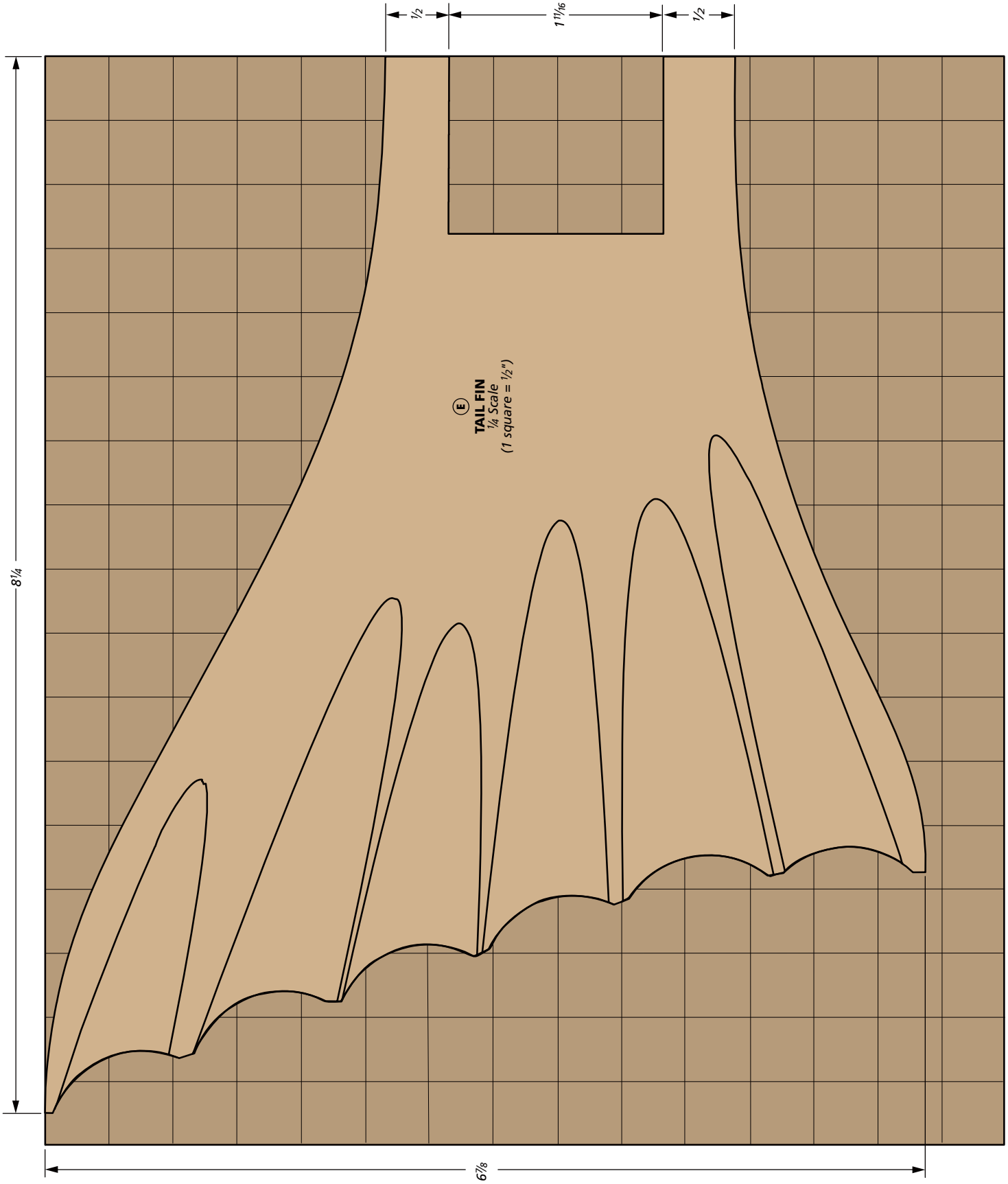

HOBBYMAGAZINES.ORG

 ©2014 August Home Publishing. All rights reserved.

online extra

shop-built

Squaring Jig

Whenever I glue up a frame and panel assembly, like a cabinet door, I want it to be dead-on square. That's why I created the jig you see in the photo above. It works great for keeping assemblies square during the glueup. It squares up doors, drawers, or picture frames with no measuring or fuss.

As you can see in the drawing below, the jig has two fixed fences. But the key is the adjustable fence that forces an assembly into the fixed fences and automatically squares it while you add clamps across the joints.

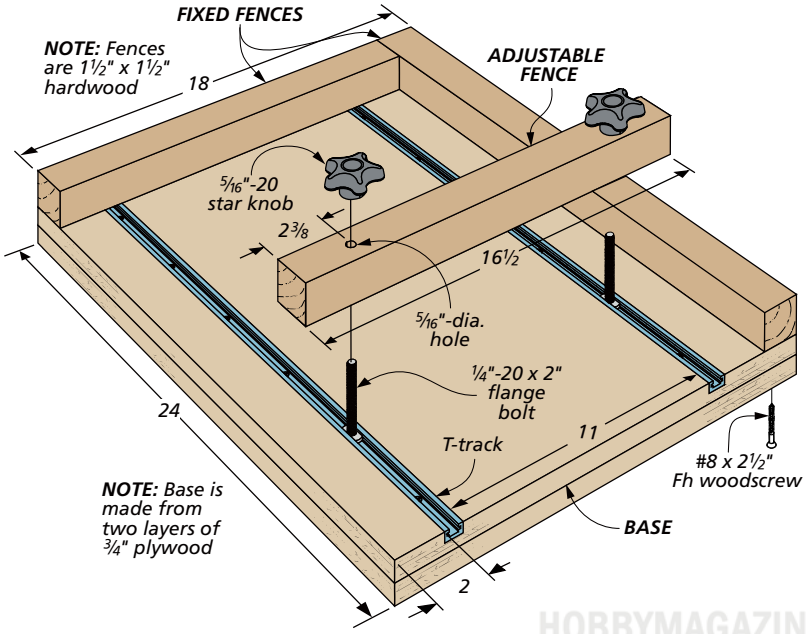

BUILDING THE JIG. To make the jig, I cut two pieces of plywood and glued them together for a base. The next step is to cut grooves to house a pair of T-tracks. Then attach two fixed fences along the left and top edges of the jig, making sure they're perfectly square to each other.

Finally, the adjustable fence is added. It's held in place with flange bolts and star knobs. A couple coats of paste wax applied to the jig keeps glue squeezeout from sticking to the base and fences.

To use the jig, I fit my assembly against the two fixed fences and slide the adjustable fence up to meet it. Then you can tighten the star knobs. A couple of clamps across the frame hold it together until the glue dries. You can see what I mean in the photo.

Since the fixed fences are perfectly square to each other, the assembly is virtually assured to be square as well. Once you get the hang of using this jig, you'll find yourself reaching for it for all sorts of glueups.

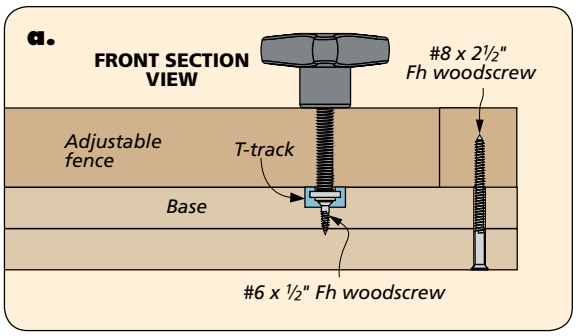

HOBBYMAGAZINES.ORG

©2014 August Home Publishing. All rights reserved.

HOBBYMAGAZINES.ORG

looking inside
Final Details

▼ *Fireplace Surround.* Raised panels, elegant crown molding, and shop-made dentil molding give this fireplace surround a traditional look. Complete, step-by-step plans start on page 34.

▲ *Towel Rack.* Although designed for bath towels, this rac! can easily display a favorite quilt. Splined miters and mortise and tenon construction ensure that the project will last for years. Turn to page 16 for more information.

▼ *Whirligig.* A light breeze is all it takes to get the blades spinning on this whimsical whirligig. Then watch as the mouth opens and closes and the tail moves from side to side. You'll find instructions for building it on page 22.

HOBBYMAGAZINES.ORG